NOTICE OF OFFICE OF MANAGEMENT AND BUDGET ACTION

Date 01/04/2010

Department of Commerce
National Oceanic and Atmospheric Administration
FOR CERTIFYING OFFICIAL: Suzanne Hilding
FOR CLEARANCE OFFICER: Diana Hynek

In accordance with the Paperwork Reduction Act, OMB has taken action on your request received 01/04/2010

ACTION REQUESTED: Revision of a currently approved collection
TYPE OF REVIEW REQUESTED: Regular
ICR REFERENCE NUMBER: 201001-0648-002
AGENCY ICR TRACKING NUMBER:
TITLE: Snapper-Grouper Fishery of the South Atlantic Region Amendment 15B
LIST OF INFORMATION COLLECTIONS: See next page

OMB ACTION: Approved without change
OMB CONTROL NUMBER: 0648-0603
The agency is required to display the OMB Control Number and inform respondents of its legal significance in accordance with 5 CFR 1320.5(b).

EXPIRATION DATE: 12/31/2012 DISCONTINUE DATE:

BURDEN:	RESPONSES	HOURS	COSTS
Previous	0	0	0
New	3,427	489	0
Difference			
Change due to New Statute	0	0	0
Change due to Agency Discretion	3,427	489	0
Change due to Agency Adjustment	0	0	0
Change Due to Potential Violation of the PRA	0	0	0

TERMS OF CLEARANCE:

OMB Authorizing Official: Kevin F. Neyland
Deputy Administrator,
Office Of Information And Regulatory Affairs

List of ICs			
IC Title	Form No.	Form Name	CFR Citation
Submission of business entity annual report with permit transfer request			50 CFR 622.5
Electronic logbook installation			50 CFR 622.5
Weekly ELB downloads			50 CFR 622.5
Vide Camera Installations			50 CFR 622.5
Monthly video camera downloads			50 CFR 622.5

PAPERWORK REDUCTION ACT SUBMISSION

Please read the instructions before completing this form. For additional forms or assistance in completing this form, contact your agency's Paperwork Clearance Officer. Send two copies of this form, the collection instrument to be reviewed, the supporting statement, and any additional documentation to: Office of Information and Regulatory Affairs, Office of Management and Budget, Docket Library, Room 10102, 725 17th Street NW, Washington, DC 20503.

1. Agency/Subagency originating request
DOC/NOAA/NMFS

2. OMB control number b. [✔] None
a. 0648 -

3. Type of information collection (*check one*)
a. [✔] New Collection
b. [ ] Revision of a currently approved collection
c. [ ] Extension of a currently approved collection
d. [ ] Reinstatement, without change, of a previously approved collection for which approval has expired
e. [ ] Reinstatement, with change, of a previously approved collection for which approval has expired
f. [ ] Existing collection in use without an OMB control number
For b-f, note Item A2 of Supporting Statement instructions

4. Type of review requested (*check one*)
a. [✔] Regular submission
b. [ ] Emergency - Approval requested by ____/____/____
c. [ ] Delegated

5. Small entities
Will this information collection have a significant economic impact on a substantial number of small entities? [ ] Yes [✔] No

6. Requested expiration date
a. [✔] Three years from approval date b. [ ] Other Specify:____/____

7. Title Snapper-Grouper Fishery of the South Atlantic Region Amendment 15B

8. Agency form number(s) (*if applicable*)

9. Keywords "Fish," "Fisheries," "Fishing Vessels"

10. Abstract

Bycatch data will be collected from selected commercial and for-hire vessels fishing for snapper-grouper in the South Atlantic exclusive economic zone (EEZ). In order to utilize the specified methodologies, Paperwork Reduction Act (PRA) clearance is needed for the following: 1) installation of electronic logbooks and/or video monitoring cameras and data downloads; 2) submission of an annual report with permit transfer requests by corporations. A collection of bycatch information from fishermen affected by the management of federal commercial fisheries is needed to ensure that national goals, objectives, and requirements of the Magnuson-Stevens Fishery Conservation and Management Act and other laws are met. The information is vital to future fishery management decisions focused on achieving optimum yield, and ending overfishing in the snapper grouper fishery.

11. Affected public (*Mark primary with "P" and all others that apply with "x"*)
a. x Individuals or households d. ___ Farms
b. P Business or other for-profit e. ___ Federal Government
c. ___ Not-for-profit institutions f. ___ State, Local or Tribal Government

12. Obligation to respond (*check one*)
a. [ ] Voluntary
b. [✔] Required to obtain or retain benefits
c. [ ] Mandatory

13. Annual recordkeeping and reporting burden
a. Number of respondents 127
b. Total annual responses 3,427
1. Percentage of these responses collected electronically 90 %
c. Total annual hours requested 491
d. Current OMB inventory 0
e. Difference 491
f. Explanation of difference
1. Program change 491
2. Adjustment

14. Annual reporting and recordkeeping cost burden (*in thousands of dollars*)
a. Total annualized capital/startup costs 0
b. Total annual costs (O&M) 0
c. Total annualized cost requested 0
d. Current OMB inventory 0
e. Difference 0
f. Explanation of difference
1. Program change
2. Adjustment

15. Purpose of information collection (*Mark primary with "P" and all others that apply with "X"*)
a. ___ Application for benefits e. ___ Program planning or management
b. ___ Program evaluation f. ___ Research
c. ___ General purpose statistics g. P Regulatory or compliance
d. ___ Audit

16. Frequency of recordkeeping or reporting (*check all that apply*)
a. [ ] Recordkeeping b. [ ] Third party disclosure
c. [✔] Reporting
1. [✔] On occasion 2. [✔] Weekly 3. [✔] Monthly
4. [ ] Quarterly 5. [ ] Semi-annually 6. [ ] Annually
7. [ ] Biennially 8. [ ] Other (describe)

17. Statistical methods
Does this information collection employ statistical methods
[✔] Yes [ ] No

18. Agency Contact (person who can best answer questions regarding the content of this submission)
Name: Rich Malinowski
Phone: (727) 551-5761

19. Certification for Paperwork Reduction Act Submissions

On behalf of this Federal Agency, I certify that the collection of information encompassed by this request complies with 5 CFR 1320.9

NOTE: The text of 5 CFR 1320.9, and the related provisions of 5 CFR 1320.8(b)(3), appear at the end of the instructions. *The certification is to be made with reference to those regulatory provisions as set forth in the instructions.*

The following is a summary of the topics, regarding the proposed collection of information, that the certification covers:

(a) It is necessary for the proper performance of agency functions;

(b) It avoids unnecessary duplication;

(c) It reduces burden on small entities;

(d) It used plain, coherent, and unambiguous terminology that is understandable to respondents;

(e) Its implementation will be consistent and compatible with current reporting and recordkeeping practices;

(f) It indicates the retention period for recordkeeping requirements;

(g) It informs respondents of the information called for under 5 CFR 1320.8(b)(3):

- (i) Why the information is being collected;
- (ii) Use of information;
- (iii) Burden estimate;
- (iv) Nature of response (voluntary, required for a benefit, mandatory);
- (v) Nature and extent of confidentiality; and
- (vi) Need to display currently valid OMB control number;

(h) It was developed by an office that has planned and allocated resources for the efficient and effective management and use of the information to be collected (see note in Item 19 of instructions);

(i) It uses effective and efficient statistical survey methodology; and

(j) It makes appropriate use of information technology.

If you are unable to certify compliance with any of the provisions, identify the item below and explain the reason in Item 18 of the Supporting Statement.

Signature of Senior Official or designee	Date

Agency Certification (signature of Assistant Administrator, Deputy Assistant Administrator, Line Office Chief Information Officer, head of MB staff for L.O.s, or of the Director of a Program or StaffOffice)	
Signature signed by James P. Burgess	Date 08/27/2009
Signature of NOAA Clearance Officer	
Signature signed by Sarah Brabson	Date 09/02/2009

SUPPORTING STATEMENT
SNAPPER-GROUPER FISHERY OF THE SOUTH ATLANTIC REGION
AMENDMENT 15B
OMB CONTROL NO. 0648-xxxx

INTRODUCTION

The National Oceanic and Atmospheric Administration (NOAA) and NOAA's National Marine Fisheries Service (NMFS) have been delegated the authority and responsibility for stewardship of the marine resources of the Nation. The authority was first granted in the Magnuson-Stevens Fishery Conservation and Management Act (Magnuson-Stevens Act) of 1976. The reauthorizations of the Magnuson-Stevens Act in 1996 and 2006 continued and in some way extended this authority. Under this authority, the Secretary of Commerce, and his designee, NMFS, has promulgated separate rules that require specific types of record keeping and data submissions. These data collection/submission regulations are intended to provide reliable and accurate information from the fishing industry and communities that support scientifically viable management actions to achieve the stewardship responsibilities, including monitoring bycatch in various fisheries.

The first step in reducing and minimizing bycatch is to characterize the magnitude and species composition of animals that are discarded. The United States (U.S.) Congress established Section 303(a) (11) of the Magnuson-Stevens Act, which states that any Fishery Management Plan (FMP) prepared by any Council, or by the Secretary of Commerce, with respect to any fishery, shall "establish a standardized reporting methodology to assess the amount and type of bycatch occurring in the fishery..." To support this mandate, the National Standard Guidelines call for development of a database for each fishery to house bycatch and bycatch mortality information (63 FR 24212).

NMFS defines a standard bycatch reporting methodology as a description of both the data collection and analyses used to estimate bycatch in a fishery. Development of a standardized reporting methodology will ensure the collection and distribution of timely, reliable, and standardized bycatch data to the public and policy decision-makers. Currently there is no such methodology fully implemented for the southeast snapper-grouper fishery due to a lack of adequate funding. During the 1990s, there were a number of ad hoc studies to estimate bycatch in the South Atlantic. The Council is seeking to implement a long-term, standardized monitoring and assessment program as part of this snapper-grouper amendment.

The need for information to support fishery management decisions, including information from at-sea observer programs and/or, logbooks, electronic logbooks (ELB), and video monitoring is increasing due to demands for additional data. The information collected is vital in assessing the economic, social, and environmental effects of the fishery management decisions and regulations for commercial, for-hire, and private recreational fisherman. Amendment 15B to the Snapper-Grouper Fishery of the South Atlantic Region (Amendment 15B), will be implemented through Proposed Rule 0648-AW12, seeks to enhance data needed to monitor bycatch, support development and monitoring of annual catch limits, and providing adequate data for stock assessments. However, monies are currently not available to fund and implement these programs.

Currently, data collection using logbooks and trip reports in the South Atlantic snapper-grouper fishery is limited to the commercial and for-hire sectors. No logbook reporting is required for the private recreational sector; however, the Marine Recreational Fishing Statistics Survey (MRFSS) does collect data at random from the private recreational sector. No other means of data collection have been implemented for the private recreational fishery, and there has never been a requirement for observer coverage, video monitoring, or ELBs. In order to supplement available data on catch in the South Atlantic snapper-grouper fishery, the South Atlantic Fishery Management Council (Council) voted to select any or all of the following as means of gathering bycatch data in the commercial, for-hire, and private recreational sectors of the fishery, which require Office of Management and Budget (OMB) approval: 1) Submission of logbooks by private recreational vessel owners; 2) observer coverage with notification of vessel trips related to vessel observers; 3) ELBs and video monitoring with preparation of vessel and gear characterization forms for vessels selected to participate in the ELB and video monitoring program along with installation of ELBs and data downloads. However, at this time, although we have information on the number of trips by private recreational vessels, we have no way of determining the number of vessels involved, as state registration for private recreational vessels does not include information on whether there are fishing trips in the exclusive economic zone (EEZ). There is also currently no way to enforce the above information collection requirements for private recreational vessels. Therefore, requirements for this group of respondents will not be included in this request, but will be added at a later date if feasible.

As the proposed rule contains additions to or modifications of information collection requirements in several currently approved information collections, we are requesting a new collection, with individual requirements to be merged later into the existing collections if practical/ as time allows. In addition, there will be a revision to "Observer Programs' Information That Can Be Gathered Only Through Questions" after its approval (the request is currently at OMB).

A. JUSTIFICATION

1. Explain the circumstances that make the collection of information necessary.

Notification of vessel trips related to vessel observer

Amendment15B proposes an observer program for selected commercial and for-hire vessels in the South Atlantic snapper grouper fishery. This will require a revision to "Observer Programs' Information That Can Be Gathered Only Through Questions" after its approval to allow the collection data associated with the vessel owners notifying the agency regarding their fishing activities, by telephonic communication, so that observers can arrange to board the vessel and observe the fishing trip, as well as any other information collected by observers through standardized questions.

Installation of ELBs, video monitoring, and data downloads

With the large number of vessels of differing sizes, gear used, and fishing capabilities compounded by seasonal variability in abundance and price of fish as well as the broad geographic distribution of the fleet, it is not possible to estimate the actual amount of bycatch and regulatory discards using current methods and data. The only practical way of improving the estimates of the amount and type of bycatch is by having a more precise means of estimating

effort, such as the electronic logbook described below. Completion of these forms by captains of vessels selected for electronic monitoring will provide data to supplement information collected from paper logbooks (already required under OMB Control No. 0648-0016), electronic logbooks/video camera monitors, and observers.

Current regulations (50 CFR §622.5) require commercial and recreational for-hire participants in the South Atlantic snapper-grouper fishery who are selected by the Science and Research Director (SRD) to maintain and submit a fishing record on forms provided by the NMFS Southeast Region Science and Research Director (OMB Control No. 0648-0016). The key advantage of logbooks is the ability to use them to cover all fishing activity relatively inexpensively. However, in the absence of any observer data, there are concerns about the accuracy of logbook data in collecting bycatch information. Biases associated with logbooks primarily result from inaccuracy in reporting of species that are caught in large numbers or are of little economic interest (particularly of bycatch species), and from low compliance rates. In the future, it may be possible to implement ELB in the fishery and studies are being conducted to determine the efficacy of ELB on commercial boats in the South Atlantic. The electronic logbook would provide data on fishing effort and location. Electronic logbooks have the potential to automatically collect information on date, time, location, and fishing times. In some ELB systems, information (species, length, and disposition) of released species can be manually entered into the system at the end of a fishing event. If the electronic format prompts a fisherman to record data as bycatch occurs, an electronic logbook may provide better estimates of bycatch than a paper logbook.

Video monitoring hardware and software could provide a cost-effective and reliable system of monitoring bycatch, release mortality, handling of fishes, and other shipboard practices. These systems have been shown to be useful in monitoring bycatch in other parts of the country. Pertinent data collected by a video electronic monitoring system would include species caught, number of hooks, location, depth, date, time, and disposition of released organisms. These data would provide information needed to help rebuild and maintain sustainable fisheries and determine what impact the fishery has on the survival of species. Data collected can be used to assess the fish species composition associated with the habitat affected by fishing gear, allowing for a better understanding of the ecosystem. Information would also be collected on protected resources encountered by fishing gear. The use of technology to record species, capture position, and disposition of released fishes has the potential to augment the collection of bycatch information and lessen the need for observers. Video technology can be used on vessels that cannot take a human observer for safety reasons or vessel limitations. Previous experience indicates video monitoring is very effective for monitoring catches from longline gear due to the size and types of species collected. It is also substantially less expensive than observer coverage for comparable data collection.

There is currently no funding for an ELB or video monitoring program. When funding becomes available it is anticipated that these programs would be designed to improve the accuracy and precision of the data being collected in the snapper-grouper fishery. Vessels used for ELB and video monitoring would be chosen randomly by the SRD from the permits database and once selected, the vessel would remain as part of the sample.

***Change of ownership of a vessel with a transferable commercial vessel permit. ***
The current regulations to transfer a commercial vessel permit are listed in 50 CFR 622.4 and

require the back page of the Federal Fisheries Permit form (OMB Control No. 0648-0205) to be completed by the seller and a Notary Public. The only difference with the proposed amendment would be a requirement for a corporation to submit their annual report with a list of its shareholders during the transfer application process.

The proposed amendment would allow an individual to transfer his or her individual transferable vessel permit to a corporation whose shares are all held by the individual or the individual and one or more of his or her immediate family members. Immediate family members include only the following: husband, wife, son, daughter, brother, sister, mother, or father. Such transfer may be done on a one to one permit transfer basis. At the time of permit renewal, the corporation must also submit to NMFS a current annual report, which specifies all shareholders of the corporation.

If the annual report shows a shareholder other than the shareholders listed in the original corporate documentation, the permit shall not be renewed unless such new shareholder is an immediate family member of the individual who originally transferred the vessel permit to the family corporation.

Thus, the only additional burden to the public would be five minutes to submit their corporation's annual report along with the required Permit/License/Endorsement Transfer application.

2. Explain how, by whom, how frequently, and for what purpose the information will be used. If the information collected will be disseminated to the public or used to support information that will be disseminated to the public, then explain how the collection complies with all applicable Information Quality Guidelines.

The information requested is used by various offices of NMFS, Regional Fishery Management Council staff, the U.S. Coast Guard and state fishery agencies under contract to NMFS to develop, implement and monitor fishery management strategies. Analyzes and summarizations of data are used by NMFS, the Regional Councils, the Departments of State and Commerce, OMB, the fishing industry, Congressional staff and the public to answer questions about the nature of the Nation's fishery resources.

These data serve as input for a variety of uses, such as: biological analyzes and stock assessments; Executive Order (E.O.) 12291 regulatory impact analyzes; quota and allocation selections and monitoring; economic profitability profiles; trade and import tariff decisions; allocations of grant funds among states; identify ecological interactions among species. The NMFS would be significantly hindered in its ability to fulfill the majority of its scientific research and fishery management missions without these data.

Notification of vessel trips related to vessel observers, ELB, and video monitoring

Each selected vessel would be notified via a registered letter one to two months before the observer is to board or they are to use electronic data collection equipment. This notification would give a time period during which a vessel would be required to notify NMFS 24 hours in advance of fishing so that an observer may accompany the trip. Vessels which inform the NMFS they do not plan to fish in the next few months would be placed in a holding pattern for observation but those selected for electronic monitoring would still have that equipment

installed. Vessels not currently fishing would be asked to notify NMFS when they next plan to fish so they can be assigned an observer. Once selected to carry an observer, a vessel must obtain a Coast Guard safety inspection through a dockside examination. Note: the burdens for notification of trips for the purpose of observer placement, and the safety inspection, will be included in the revision to "Observer Programs' Information That Can Be Gathered Only Through Questions."

In an ideal world, 100% observer coverage for all fishing effort and catch would provide fishery managers with very accurate measures of catch. The costs associated with 100% observer coverage and the issue of accommodating observers on small vessels limit the amount of monitoring NMFS will be proposing.

The number of commercial snapper-grouper fishing trips to the South Atlantic in 2006 was 13,159, for 857 vessels landing snapper-grouper species. In 2006, the number of for-hire trips totaled 15,242 for 1,681 permitted vessels. The number of private recreational trips in 2006 was 24,094 but, as stated in the introduction, the number of vessels participating is unknown at this time. Based upon recommendations from the NMFS December 2003 Evaluating Bycatch: A National Approach To Standardized Bycatch Monitoring Programs, the proposed sample size would be a randomly selected 2% samples of commercial and for-hire vessels and trips for observer coverage, and independent samples of 2% of commercial and for-hire vessels for electronic monitoring (as it has not been decided how to distribute the electronic monitoring devices, at this point we are assuming that all selected vessels may have both an ELB and an video camera, and thus we are accounting for the maximum possible burden.

Table 1. Number of permitted vessels, trips, observed trips, ELBs and video monitoring equipment for proposed data collection actions in Amendment 15B. (2006 Data)

Respondents	# Permitted vessels	# Trips	# Observer Trips	# ELBs Installed	# Video Cameras Installed
Commercial	857	13,159	263	17	17
For-Hire	1,667	15,242	305	33	33
TOTALS			**568**	**50**	**50**

Installation of ELBs and data downloads

There is currently no funding for an ELB or video monitoring programs. When funding becomes available it is anticipated that these programs would be designed to improve the accuracy and precision of the data being collected in the snapper-grouper fishery. Vessels used for ELB and video monitoring would be chosen randomly by the SRD from the permits database and once selected, the vessel would remain as part of the sample.

To initiate an ELB or video monitoring program, NMFS would send a letter to an owner or operator of a selected vessel advising of his or her obligation to participate in the program. In cooperation with the owner or operator, NMFS staff or an authorized representative would meet at the selected vessel to install the NMFS furnished ELB and/or video monitor on the vessel and to collect basic vessel and gear information that would later be correlated with the ELB or video monitoring information. Using the Global Positioning System, an ELB would automatically record vessel position information over time from which conclusions could be drawn regarding vessel activity, e.g., the vessel is fishing or transiting. At intervals determined by NMFS, the

ELB memory unit or video monitor tape would be removed and provided to the SRD. The owner or operator could either mail the memory unit or tape to the SRD or arrange for a NMFS or state port agent to collect the unit or tape. The ELB program would supplement existing post-trip interview data and is intended to provide better estimates of the amount and location of effort occurring during a trip. NMFS would use total effort estimates based on best available scientific information to extrapolate observer-collected data into overall estimates of total finfish and invertebrate bycatch. A pilot program using ELBs started in 1999 (OMB Control No. 0648-0543), with increasing coverage each year. The units have proved to be reliable and the data retrieved have provided substantial new information regarding the effort of the fishery in which it was used.

Pertinent data collected by a video electronic monitoring system would include species caught, number of hooks, location, depth, date, time, and disposition of released organisms. These data would provide information needed to help rebuild and maintain sustainable fisheries and determine what impact the fishery has on the survival of species. Data collected can be used to assess the fish species composition associated with the habitat affected by fishing gear, allowing for a better understanding of the ecosystem. Information would also be collected on protected resources encountered by fishing gear.

Change of ownership of a vessel with a transferable commercial vessel permit.
The current regulations to transfer a commercial vessel permit are listed in 50 CFR 622.4 and require the back page of the Federal Fisheries Permit form to be completed by the seller and a Notary Public. The only difference with the proposed amendment would be a requirement for a corporation to submit their annual report with a list of its shareholders during the transfer application process.

The estimated public burden for annual reports to accompany 127 annual transfers (based on data from 2007 and 2008) is provided in Table 2, in Question 12.

It is expected the information collected will be disseminated to the public or used to support publicly disseminated information. As explained in the preceding paragraphs, the information gathered has utility. NMFS will retain control over the information and safeguard it from improper access, modification, and destruction, consistent with NOAA standards for confidentiality, privacy, and electronic information. See response to Question 10 of this Supporting Statement for more information on confidentiality and privacy. The information collection is designed to yield data that meet all applicable information quality guidelines. Prior to dissemination, the information will be subjected to quality control measures and a pre-dissemination review pursuant to Section 515 of Public Law 106-554.

3. Describe whether, and to what extent, the collection of information involves the use of automated, electronic, mechanical, or other technological techniques or other forms of information technology.

Using the Global Positioning System, an ELB would automatically record vessel position information over time from which conclusions could be drawn regarding vessel activity, e.g., the vessel is fishing or transiting. At intervals determined by NMFS, the ELB memory unit or video monitor tape would be removed and provided to the SRD. The owner or operator could either mail the memory unit or tape to the SRD or arrange for a NMFS or state port agent to collect the

unit or tape. The electronic logbook autonomously collects effort data and is downloaded by NMFS personnel every 2-3 months. The downloading process takes less than one minute.

Video monitoring systems require about eight hours to set up equipment but hard drives containing data can be removed and replaced with new hard drives in less than one minute.

For this program, there is no other electronically submitted/collected information.

4. Describe efforts to identify duplication.

The Magnuson-Stevens Act's operational guidelines require each FMP to evaluate existing state and federal laws that govern the fisheries in question, and the findings are made part of each FMP. Each Fishery Management Council membership is comprised of state and federal officials responsible for resource management in their area. These two circumstances identify other collections that may be gathering the same or similar information. In addition, each FMP undergoes extensive public comment periods where potential applicants review the proposed permit application requirements. Therefore, NMFS is confident it is aware of similar collections if they exist. The other information proposed to be collected is not being collected elsewhere; therefore, this data collection would not cause duplication. Although the Southeast Region uses Vessel Monitoring Systems (VMS) for some of its commercial fishing fleets, currently, no such program exists in the snapper-grouper fishery fleet; therefore, no duplication exists between the ELB and VMS programs.

5. If the collection of information involves small businesses or other small entities, describe the methods used to minimize burden.

Because all applicants are considered small businesses, separate requirements based on size of business have not been developed. Only the minimum data to meet the current and future needs of NMFS' fisheries management are requested from the vessel owners.

6. Describe the consequences to the Federal program or policy activities if the collection is not conducted or is conducted less frequently.

If the amount and type of bycatch for the snapper-grouper fishery in the South Atlantic cannot be identified and characterized, the effect of management measures are not realized and information used in stock assessments is less certain. The Southeast Region would be in violation of the Magnuson-Stevens Act Section 303 (a) (11) if bycatch amount and type is not identified in the snapper-grouper fishery. In addition, due to the seasonal variability in abundance and price of species and the broad geographic distribution of the fleet, it is very difficult to estimate the actual amount of bycatch using current methods and data.

7. Explain any special circumstances that require the collection to be conducted in a manner inconsistent with OMB guidelines.

There are no special circumstances that require the collection to be conducted in a manner inconsistent with Office of Management and Budget (OMB) guidelines.

8. Provide information on the PRA Federal Register Notice that solicited public comments on the information collection prior to this submission. Summarize the public comments received in response to that notice and describe the actions taken by the agency in response to those comments. Describe the efforts to consult with persons outside the agency to obtain their views on the availability of data, frequency of collection, the clarity of instructions and recordkeeping, disclosure, or reporting format (if any), and on the data elements to be recorded, disclosed, or reported.

A Proposed Rule RIN 0648-AW12 was published in the Federal Register on June 30, 2009 (74 FR 31225), soliciting public comment.

9. Explain any decisions to provide payments or gifts to respondents, other than remuneration of contractors or grantees.

There are no payments or other remunerations to respondents.

10. Describe any assurance of confidentiality provided to respondents and the basis for assurance in statute, regulation, or agency policy.

All data submitted under the proposed collection will be handled as confidential material in accordance with the Magnuson-Stevens Act, Section 402b, and NOAA Administrative Order 216-100, Protection of Confidential Fishery Statistics. Respondents are given this assurance as a part of the initial package received with the ELB.

11. Provide additional justification for any questions of a sensitive nature, such as sexual behavior and attitudes, religious beliefs, and other matters that are commonly considered private.

No questions of a sensitive nature are asked.

12. Provide an estimate in hours of the burden of the collection of information.

Table 2. Number of selected vessels, responses and public hours involved for proposed data collection actions in Amendment 15B (2006 Data).

Respondent vessels	ELB install	Hours @ 30 min. per install	Weekly ELB download (vessels *52)	Hours @ 1 min. per week	Video cam install	Hours @ 8 hours per install	Monthly video cam Download (vessels *12)	Hours @ 1 min. per month	Annual report sub. with transfer request	Hours @ 5 min. per response	Public hours
Commercial - all									127	11	**11**
Commercial (17) and for-hire (33) selected vessels	50	25	2,600	43	50	400	600	10			**478**
Total responses	**50**		**2,600**		**50**		**600**		**127**		**Responses: 3,427** **Hours: 489**

13. Provide an estimate of the total annual cost burden to the respondents or record-keepers resulting from the collection (excluding the value of the burden hours in Question 12 above).

There are no capital or recordkeeping/reporting costs anticipated for this collection.

14. Provide estimates of annualized cost to the Federal government.

Current estimates of unit costs of aspects of the programs are available, such as the cost of an electronic logbook, approximately $500 per unit, and video monitoring, estimated to cost 20-60% of an observer program (with one observer day estimated at $1,000) (McElderry 2003). A rough estimate of providing either an ELB or video monitoring for 50 vessels would be $50,000 ($25,000 for equipment and an equal amount for installs, downloading and reviewing of the data).

15. Explain the reasons for any program changes or adjustments.

This is a new program.

16. For collections whose results will be published, outline the plans for tabulation and publication.

The results from this collection are not planned for statistical publication, although NMFS may distribute the results of the observations for general information.

17. If seeking approval to not display the expiration date for OMB approval of the information collection, explain the reasons why display would be inappropriate.

N/A.

18. Explain each exception to the certification statement.

N/A.

B. COLLECTIONS OF INFORMATION EMPLOYING STATISTICAL METHODS

1. Describe (including a numerical estimate) the potential respondent universe and any sampling or other respondent selection method to be used. Data on the number of entities (e.g. establishments, State and local governmental units, households, or persons) in the universe and the corresponding sample are to be provided in tabular form. The tabulation must also include expected response rates for the collection as a whole. If the collection has been conducted before, provide the actual response rate achieved.

The information will be collected from commercial and for-hire fishing vessels, with private recreational vessel information to be added at a later time. The potential respondent universe for this request is commercial and for-hire vessels with federal commercial permits that fish in the South Atlantic EEZ. It is estimated that there will be 857 commercial vessels and 1,681 for-hire

vessels. Funds are not currently available to implement these programs; however, the current planned information collection requirements are based upon recommendations from the NMFS December 2003 Evaluating Bycatch: A National Approach To Standardized Bycatch Monitoring Programs, the proposed sample size would be 2% randomly selected number of trips made for observer coverage and 2% randomly selected permitted vessels for electronic monitoring (the pending revision to "Observer Programs' Information That Can Be Gathered Only Through Questions" will cover the burden for the 2% selected vessels and their trips).

2. Describe the procedures for the collection, including: the statistical methodology for stratification and sample selection; the estimation procedure; the degree of accuracy needed for the purpose described in the justification; any unusual problems requiring specialized sampling procedures; and any use of periodic (less frequent than annual) data collection cycles to reduce burden.

The Southeast Fishery Science Center has not yet designed and implemented sampling programs for data collections activities for the snapper-grouper fishery in the South Atlantic that involve observers, ELB, and video monitoring. However, an established observer program exists for many other fisheries in the Southeast. The vessel sampling frame is derived from a list of active fishing permits. A similar sampling design could be employed to select vessels for ELB and video monitoring on commercial and for-hire vessels. Programs may stratify the sample by area, gear type, calendar quarter, and/or other variables. These details will be worked out as funds become available to implement the proposed data collection program, with the proposed sample sizes of 2% randomly selected number of vessels and trips made for observer coverage and 2% randomly selected permitted vessels for electronic monitoring.

As these information collections will be mandatory for selected vessels, and applicable vessel permits will not be renewed if there is noncompliance, we are expecting close to an 100% response rate – as is achieved under OMB Control No. 0648-0543, Gulf of Mexico Electronic Logbook.

3. Describe the methods used to maximize response rates and to deal with nonresponse. The accuracy and reliability of the information collected must be shown to be adequate for the intended uses. For collections based on sampling, a special justification must be provided if they will not yield "reliable" data that can be generalized to the universe studied.

A number of methods would be used to maximize the response rate. Most of the information would be collected by an observer or autonomously by electronic equipment. Therefore, response time for collection of data would be small for captain/crew. Information collected directly by an observer on a fishing vessel would be done at a time that is convenient for the captain/crew. Observers are trained to help the captain and crew understand the purpose of the data collection. Captain and crew will also be trained on the use of ELB and video monitoring equipment. Technicians will set up the gear and provide any needed maintenance on equipment. Outreach activities would also help increase the response rate. Renewal of commercial and for-hire permits will be dependent on the fulfillments of the requirements.

4. Describe any tests of procedures or methods to be undertaken. Tests are encouraged as effective means to refine collections, but if ten or more test respondents are involved OMB must give prior approval.

Pilot studies have recently been conducted or are ongoing for ELB and video monitoring. In the future, it may be possible to implement electronic logbooks in the fishery. The Council tested the use of electronic logbook reporting using the Thistle Marine HMS-110 unit to examine the magnitude and spatial distribution of fishing effort and species composition. The project was implemented on two commercial snapper/grouper vessels in South Carolina and North Carolina from May 2002 through November 2002. Over 4,000 high spatial and temporal resolution data points on commercial catch and effort representing 19 fishing trips were captured. The Thistle box allows fishermen to record all species encountered as well as the disposition of released specimens. A comparison of electronic versus paper reporting for a single trip indicates more than twice the number of species than recorded on the trip ticket. The Thistle electronic logbook is also set up to record fish lengths and has the potential to automatically collect information on date, time, location, and fishing times.

A pilot study was recently conducted to test the feasibility of developing a system that would use Video Electronic Monitoring to satisfy the data needs of the reef longline fishery in the Gulf of Mexico. Video systems consisted of three closed circuit television cameras, a GPS receiver, a hydraulic pressure transducer, a winch rotation sensor, and a system control box. Systems were placed on six vessels for a total of over 148 days at sea. Video monitor data and observer fishing event were available for comparison for a total of 218 longline sets. In terms of catch, both video monitoring and observer methods were numerically within 2.7% of each other and detection of protected species categories was identical. Catch identification comparisons between observer and video monitoring methods were generally good with 80% of catch pairing comparisons having a positive match on a hook-by-hook analysis. Overall, results of this study suggest that video monitoring systems shows promise for collecting fishing activity spatial-temporal data and assessing catch composition and further work is needed to determine if the technology could provide reliable catch disposition data.

A pilot study to test video monitoring on hook-and-line (bandit rig) boats in the South Atlantic is ongoing. The project design will allow for statistical comparisons among fishermen's logbooks, at-sea-observers, and electronic video monitoring systems as well as provide information on the age-size structure of frequently discarded species in the complex. Video monitoring systems are being installed on six bandit-rig vessels operating out of North Carolina (NC), South Carolina (SC) and Georgia (GA). Each system consists of 2-5 cameras placed on the back deck of a boat, plus a global positioning system, all connected to a digital video recorder. Pertinent data collected by the system includes species caught, location, depth, date, time, and disposition of released organisms. Each system will be configured to collect data for the entire study period (12 months). In addition to completing detailed discard logbooks, fishermen will retain up to 300 regulatory discards for selected species in order to characterize the age-size structure by the stock. At-sea observers will be placed on a portion of trips monitored with video hardware. Video monitoring data will be interpreted and compared to results from fishermen's discard logbooks as well as data recorded by at-sea observers.

The results of pilot studies will be used to design ELB and video monitoring systems appropriate for the various fisheries in the South Atlantic.

5. Provide the name and telephone number of individuals consulted on the statistical aspects of the design, and the name of the agency unit, contractor(s), grantee(s), or other person(s) who will actually collect and/or analyze the information for the agency.

John C. McGovern, Ph.D.
National Marine Fisheries Service
Southeast Regional Office
(727) 824-5305

David R. Gloeckner, Ph.D.
National Marine Fisheries Service
Southeast Fisheries Science Center
Beaufort Laboratory
(252) 728-8721

James M. Nance, Ph.D.
National Marine Fisheries Service
Southeast Fisheries Science Center
Galveston Laboratory
(409) 766-3507

EVALUATING BYCATCH:
A NATIONAL APPROACH TO STANDARDIZED BYCATCH MONITORING PROGRAMS

[final draft report]

NATIONAL MARINE FISHERIES SERVICE
NATIONAL OCEANIC AND ATMOSPHERIC ADMINISTRATION
U.S. DEPARTMENT OF COMMERCE WASHINGTON, D.C.

DECEMBER 2003

Acknowledgments

The methodological approach for determining bycatch was developed through a series of meetings and conference calls by a team of the National Marine Fisheries Service (NMFS) over a 6-month period in early 2003. The team was made up of fisheries managers and scientists from NMFS Regional Offices, Science Centers and headquarters:

Joseph E. Powers, Chair	Southeast Fisheries Science Center, Miami, Florida
Lee Benaka	Office of Sustainable Fisheries, Silver Spring, Maryland
Victoria R. Cornish	Office of Science and Technology, Silver Spring, Maryland
Jonathan Cusick	Northwest Fisheries Science Center, Seattle, Washington
Tanya Dobrzynski	Office of Protected Resources, Silver Spring, Maryland
Michael Fogarty	Northeast Fisheries Science Center, Woods Hole, Massachusetts
Svein Fougner	Southwest Regional Office, Long Beach, California
James M. Nance	Southeast Fisheries Science Center, Galveston, Texas
Joseph M. Terry	Alaska Fisheries Science Center, Seattle, Washington

Colleagues throughout NMFS provided voluminous data, information, comments and suggestions throughout development of this report. We thank them for their efforts in ensuring that all perspectives were heard and for providing insight into frequently contentious aspects of bycatch in their regions.

To be cited as:
National Marine Fisheries Service, 2003. Evaluating bycatch: a national approach to standardized bycatch monitoring programs. NOAA, NMFS, Silver Spring, MD. 88 p.

Executive Summary

The National Marine Fisheries Service recently issued a National Bycatch Strategy to address issues related to management of bycatch within the nation's fisheries. One component of that strategy was the establishment of a National Working Group on Bycatch (NWGB) to develop a national approach to standardized bycatch reporting methodologies and monitoring programs. This work is to be the basis for regional teams (also established in the National Bycatch Strategy) to make fishery-specific recommendations.

The NWGB reviewed regional issues related to fisheries and bycatch and discussed advantages and disadvantages of various methods for estimating bycatch, including fishery-independent surveys, self-reporting through logbooks, port sampling, recreational sampling, at-sea observation including observers, digital video cameras, digital observers, remote monitoring and stranding networks. All of the methods may contribute to useful bycatch estimation programs, but at-sea observation (observers or digital observation) provides the best mechanism to obtain reliable and accurate bycatch estimates. Often, observer programs will be the most cost effective of these alternatives.

At-sea sampling designs should be formulated to achieve precision goals for the least amount of observation effort, while also striving to increase accuracy. This is done through random sample selection, and by developing appropriate sampling strata and sampling allocation procedures. These designs are needed for each fishery. Sampling programs will be driven by the precision required by managers to address management needs: for estimating management quantities such as allowable catches through a stock assessment, for evaluating bycatch relative to a management standard such as allowable take and for developing mitigation mechanisms. The recommended precision goals for estimates of bycatch are defined in terms of the coefficient of variation (CV) of each estimate. The recommended goals are as follows:

Protected Species

For marine mammals and other protected species, including seabirds and sea turtles, the recommended precision goal is a 20-30% *CV* for estimates of bycatch for each species/stock taken by a fishery.

Fishery Resources

For fishery resources, excluding protected species, caught as bycatch in a fishery, the recommended precision goal is a 20-30% *CV* for estimates of total discards

These CV goals are levels of precision to which NOAA Fisheries strives to achieve. However, it is important to recognize that (1) there are intermediate steps in increasing precision which may not immediately achieve the goals; (2) there are circumstances in which higher levels of precision may be desired, particularly when management is needed on fine spatial or temporal scales; (3) there are circumstances under which meeting the precision goal would not be an efficient use of public resources; and (4) there may be significant logistical constraints to achieving the goal. However, a decision to accept lower precision should be based on analyses and understanding of the implications of that decision. Therefore, flexibility should be considered when setting CV targets. For example, the rare-event nature of encounters with some protected species might mean that CV's of 20-30% cannot be attained and that precision in absolute numbers be considered. In such a case more adaptive management-observation systems may be needed. Also, if CV's of 20-30% for *individual* fishery species can be obtained and are needed for management, then this precision should be encouraged.

A total of 84 fisheries was evaluated for bycatch monitoring and classified into one of five categories: no at-sea sampling program (*None*), *Baseline*, *Pilot*, *Developing*, *Mature*. Additionally all of these fisheries were rated as to their vulnerability (*High*, *Moderate* or *Low*) to bycatch of fishery

resources, marine mammals, and other protected species including seabirds and sea turtles. Of these fisheries, 5% have a Mature observation program, 20% were Developing (25% were either Mature or Developing), 10% have a Pilot program, 29% have a Baseline program and 37% do not have a program (None). Thirty-one percent of these fisheries are rated *High* for bycatch vulnerability of one or more of the three resource types: fishery resources, marine mammals, or other protected species (thus, 69% are rated *Moderate* or *Low* for all three resources); 6% of these fisheries are rated *High* for bycatch of one or more of the three resource types and are recommended for establishment of Baseline or Pilot observation programs. A strategy for bycatch monitoring was developed based upon the vulnerability of a fishery, the adequacy of current monitoring programs and sampling cost estimates.

Regional teams were established as part of the National Bycatch Strategy. Based in part on information in this report, those teams will develop fishery-specific implementation plans to monitor and reduce bycatch. Their activities will include refinement of the information in this report. Specifically, those refinements should include: review of the fisheries included in the list of fisheries used here (whether to include state fisheries or not); and estimation of the cost of moving existing sampling programs toward *Developing* or *Mature* regimes.

Table of Contents

Executive Summary iii

1. Introduction 1

2. Statutory Authorities 2
   - 2.1 Magnuson-Stevens Fishery Conservation and Management Act 2
   - 2.2 Endangered Species Act 3
   - 2.3 Marine Mammal Protection Act 4
   - 2.4 Migratory Bird Treaty Act 4

3. Regional Characteristics of Bycatch 6
   - 3.1 Southwest Region 6
   - 3.2 Southeast Region 7
   - 3.3 Northwest Region 10
   - 3.4 Alaska Region 12
   - 3.5 Northeast Region 16
   - 3.6 Pacific Islands Region 17

4. Alternative Methods for Monitoring Bycatch 20
   - 4.1 Fishery-Independent Surveys 20
     - 4.1.1 Costs of Estimating Bycatch from Fishery-Independent Surveys 23
     - 4.1.2 Safety Aboard Fishery-Independent Surveys 23
     - 4.1.3 Summary of Fishery-Independent Surveys 24
   - 4.2 Fishery-Dependent Self-Reporting 24
     - 4.2.1 Logbooks 24
       - 4.2.1.1 Accuracy of Logbooks 27
       - 4.2.1.2 Costs Associated with Logbook Programs 28
       - 4.2.1.3 Safety and Logistics of Logbooks 29
       - 4.2.1.4 Logbook Program Summary 29
     - 4.2.2 Port Sampling 30
     - 4.2.3 Recreational Sampling 30
   - 4.3 At-Sea Observation 31
     - 4.3.1 At-Sea Observers 31
       - 4.3.1.1 Estimating Bycatch 33
       - 4.3.1.2 Precision of Bycatch Estimates 33
       - 4.3.1.3 Accuracy and Bias in Observer Programs 34
       - 4.3.1.4 Cost and Logistics in Observer Programs 35
       - 4.3.1.5 Safety in Observer Programs 36
       - 4.3.1.6 Observer Programs Summary 37
     - 4.3.2 Digital Video Cameras 37
     - 4.3.3 Digital Observers 38
     - 4.3.4 Alternate Platforms and Remote Monitoring 39
   - 4.4 Stranding Networks 40
   - 4.5 Summary 41

5. Estimation of Bycatch 43
   - 5.1 Definition of Bycatch and Precision 43
   - 5.2 Estimation from At-Sea Observations 44

5.2.1 Sample Selection 46
5.2.2 Sampling Strata 48
5.2.3 Sample Allocation 48
5.2.4 Estimators 49
5.2.5 Sample Size Requirements 50
5.2.6 Accuracy and Bias 51
5.3 Precision of Bycatch Estimates 51
5.3.1 Management Uses of Bycatch Estimates 51
5.3.1.1 Assessment Uses 52
5.3.1.2 Monitoring Relative to Management Standards 52
5.3.1.3 Developing Mitigation Plans 53
5.3.2 Precision of Bycatch Estimates from Fisheries 54
5.4 Precision Goals for Estimating Bycatch from a Fishery 55
5.5 Other Factors That May Affect Observer Coverage Levels 56

6. Status of Bycatch Observation 57
6.1 A Survey of Observation Programs 57
6.2 Enhancement of Observation Programs 69
6.2.1 Criteria for Enhancing Observations 69
6.2.2 Enhanced Sample Sizes and Costs 72

7. Vulnerability of Fisheries to Adverse Impacts of Bycatch 73
7.1 Vulnerability Criteria for Fishery Resources 73
7.2 Vulnerability Criteria for Marine Mammals 74
7.3 Vulnerability Criteria for Other Protected Species, Including Seabirds 75
7.4 Bycatch Vulnerability of Fisheries 75

8. Strategies to Address Bycatch 77
8.1 The Nature and Source of the Bycatch Problem 77
8.2 Information Needed to Implement an Effective and Efficient Solution to the Bycatch Problem for the Fishery 78
8.3 Expected Net Benefits 79
8.4 Setting National Priorities for Improving Bycatch Monitoring 79

9. Literature Cited 81

Appendix 1. Definition of Bycatch Terms (from NMFS 1998a) 85

Appendix 2. A Characterization of Precision Tradeoffs in an Assessment 86

Appendix 3. Precision of a Bycatch Estimate of an Aggregate of Species and the Precision of Estimates of Individual Species within the Aggregate 87

Appendix 4. Comments on Precision Requirements for Rare-event Species 87

1. Introduction

Bycatch is defined as the discarded catch of any living marine resource plus retained incidental catch and unobserved mortality due to a direct encounter with fishing gear (NMFS 1998a)[1]. Bycatch occurs if a fishing method is not perfectly selective or if fishermen have a sufficient incentive to catch more than will be retained. A fishing method is perfectly selective if it results in the catch and retention only of the desired size, sex, quality, and quantity of target species without other fishing-related mortality (See Appendix 1 for related definitions from NMFS 1998a). Very few fishing methods meet this criterion and, thus, bycatch is a source of fishing mortality because some of the bycatch does not survive.

The stewardship responsibility of the National Marine Fisheries Service (NMFS) to lead and coordinate the nation's collaborative effort both to monitor and reduce bycatch of living marine resources is identified in the Magnuson-Stevens Fishery Conservation and Management Act, the Endangered Species Act, the Marine Mammal Protection Act and the Migratory Bird Treaty Act.

As part of its effort to meet this responsibility, NMFS reported on the scope and complexity of bycatch in the United States and approaches to addressing bycatch problems (NMFS 1998a). Recently, NMFS developed a National Bycatch Strategy to monitor and mitigate bycatch within the nation's fisheries. Within that strategy a National Working Group on Bycatch (NWGB) was appointed to formulate procedures for addressing bycatch, in particular the development of *standardized reporting methodologies*. This report presents the results of the efforts of the NWGB.

The report is organized in the following manner. First, the statutory authorities to monitor and reduce bycatch are reviewed since they have significant impact on the design of bycatch reporting procedures. Then, discussions of the regional perspectives on bycatch problems are updated from that in NMFS (1998a). Next, the range of options that are available to monitor bycatch is discussed and evaluated; this discussion is followed by evaluation of statistical design and precision criteria for monitoring bycatch; fishery-by-fishery examination of current monitoring capabilities; and suggested priorities for addressing bycatch problems. Perhaps the most important function of this report will be in guiding the efforts of the regional teams that were formed within the National Bycatch Strategy to further develop bycatch monitoring and mitigation.

---

[1] NMFS (1998a) notes: After careful review of the various definitions of *bycatch* and associated terms, NMFS considered the definitions contained in the Magnuson-Stevens Act as the basis for development of an inclusive definit Stevens Act defines *bycatch* as "fish which are harvested in a fishery, but which are not sold or kept for personal use responsibilities, as defined principally by the Magnuson-Stevens Act, the Marine Mammal Protection Act, and the I this definition. Specifically, living marine resources other than "fish" as defined in the Magnuson-Stevens Act (i.e., ma included to consider all species taken or encountered in marine fisheries and "retained catch of non-target species wa

2. Statutory Authorities

NMFS has a variety of bycatch reduction responsibilities under its governing statutes. Specifically, Congress included bycatch reduction mandates in the Magnuson-Stevens Fishery Conservation and Management Act (MSA), the Endangered Species Act (ESA), the Marine Mammal Protection Act (MMPA), and the Migratory Bird Treaty Act (MBTA). These mandates were constructed to respond to bycatch concerns for different species in different ways. Throughout this report, bycatch reduction activities and responsibilities should be viewed within the context of relevant statutory requirements and standards for fish, marine mammals, and other protected species, including seabirds. Following is a discussion of the various bycatch reduction requirements and standards in each statute.

2.1 Magnuson-Stevens Fishery Conservation and Management Act

In 1996, Congress amended the MSA in part to define the term "bycatch" as well as to require that it be minimized to the extent practicable. Bycatch, as defined by the MSA (16 U.S.C. § 1802 (2)), "means fish which are harvested in a fishery, but which are not sold or kept for personal use, and includes economic discards and regulatory discards. Such a term does not include fish released alive under a recreational catch and release fishery management program." Economic discards are "fish which are the target of a fishery, but which are not retained because of an undesirable size, sex, or quality, or other economic reason." The term "'regulatory discards' means fish harvested in a fishery which fishermen are required by regulation to discard whenever caught, or are required by regulation to retain but not sell." Note that since the definition of "fish" refers to "finfish, mollusks, crustaceans, and all other living forms of animal and plant life other than marine mammals and birds," the bycatch reduction and monitoring requirements in the MSA do not apply to all living marine resources.

National standard 9 of the MSA requires that "conservation and management measures shall, to the extent practicable, (A) minimize bycatch and (B) to the extent bycatch cannot be avoided, minimize the mortality of such bycatch" (16 U.S.C. § 1851(9)). Sec. 303 of the MSA expands on this requirement somewhat, stating that fishery management plans are required to "establish a standardized reporting methodology to assess the amount and type of bycatch occurring in the fishery, and include conservation and management measures that, to the extent practicable and in the following priority (A) minimize bycatch; and (B) minimize the mortality of bycatch which cannot be avoided" (16 U.S.C. § 1853(11)).

NMFS regulations at 50 CFR 600.350(d)(3) provide the following guidance on factors that should be considered in determining the practicability of a particular management action to minimize bycatch or the mortality of bycatch. They state, "A determination of whether a conservation or management measure minimizes bycatch or bycatch mortality to the extent practicable, consistent with other national standards and maximization of net benefits to the Nation, should consider the following factors: (A) Population effects for bycatch species; (B) Ecological effects due to changes in the bycatch of that species (effects on other species in the ecosystem); (C) Changes in the bycatch of other species of fish and the resulting population and ecosystem effects; (D) Effects on marine mammals and birds; (E) Changes in fishing, processing, disposal, and marketing costs; (F) Changes in fishing practices and behavior of fishermen; (G) Changes in research, administration, and enforcement costs and management effectiveness; (H) Changes in the economic, social, or cultural value of fishing activities and non-consumptive uses of fishery resources; (I) Changes in the distribution of benefits and costs; and (J) Social effects."

Although the MSA excludes fish released alive under a recreational catch and release fishery management program, from its definition of bycatch , Section 303(a)(12) of the MSA, states that any fishery management plan shall "assess the type and amount of fish caught and released alive during recreational fishing under catch and release fishery management programs and the mortality of such fish, and include conservation and management measures that, to the extent practicable, minimize mortality and ensure survival of such fish". Therefore, for purposes of this report, bycatch will be defined more broadly over both commercial and recreational fisheries. However, the distinction between commercial and recreational bycatch will be addressed when developing mechanisms and strategies for monitoring and mitigating bycatch.

2.2 Endangered Species Act

The Endangered Species Act (ESA) requires the federal government to protect and conserve species and populations that are endangered, or threatened with extinction, and to conserve the ecosystems on which these species depend. Some of these threatened and endangered species, including certain species of sea turtles, Pacific salmon, seabirds and marine mammals, are captured as bycatch in the nation's fisheries. Under the ESA's protection process, after a species is identified as threatened or endangered, a recovery plan that outlines actions to improve the species' status is prepared and implemented. Recovery plans for marine species generally include a requirement to reduce incidental capture of protected species in commercial fishing operations. In some cases, fisheries can be restricted or terminated because they impose mortality rates on protected species that impede the recovery of the listed population. Other provisions of the ESA ensure that sources of mortality for protected species are identified and minimized or mitigated through conservation plans.

The bycatch reduction requirements of the ESA follow from Section 9(a)(1)(B) and 9(a)(1)(C) of the ESA, which prohibit the take of endangered species within the United States or the territorial sea of the United States, and on the high seas, respectively. "Take" is defined by the ESA as "to harass, harm, pursue, hunt, shoot, wound, kill, trap, capture, or collect, or attempt to engage in any such conduct." (16 U.S.C. 1536(18)). ESA Sections 4, 6, 7 and 10 provide mechanisms for the limited take of ESA-listed species. Of particular relevance for fisheries bycatch is Section 7, which provides that "Each Federal agency shall ... insure that any action authorized, funded, or carried out by such agency ... is not likely to jeopardize the continued existence of any endangered species or threatened species or result in the destruction or adverse modification of habitat of such species ..."(16 U.S.C. §1536(a)(2)).

Both NMFS and the US Fish and Wildlife Service develop Biological Opinions pursuant to a formal consultation under Section 7 of the ESA to assess the impact of proposed activities on species under their respective jurisdictions. If the resulting Biological Opinion finds that the proposed activity is likely to result in jeopardy to the species or adverse modification to its habitat, the Biological Opinion will outline Reasonable and Prudent Alternatives (RPAs) that must be taken to ensure that the species is not jeopardized. If the Biological Opinion finds that the proposed activity is likely to result in bycatch of an endangered species, then an Incidental Take Statement is issued that specifies the impact of any incidental taking, as well as Reasonable and Prudent measures, and terms and conditions to implement the measures, necessary to minimize such impacts. Commercial fisheries that result in bycatch of listed sea turtles, for example, would be required to implement the relevant RPAs, or Reasonable and Prudent Measures, as applicable, to protect sea turtles from fishing gear.

2.3 Marine Mammal Protection Act

The Marine Mammal Protection Act (MMPA) seeks to maintain populations of marine mammals at optimum sustainable population levels, principally by regulating the mortality and serious injury of marine mammals. This includes fishing-related mortality and serious injury.

While the MMPA prohibits the "take" of marine mammals, it provides exceptions to the marine mammal take prohibition for incidental mortality and serious injury in the process of commercial fishing activities as well as a limited number of other activities.
"Take" is defined in the MMPA as, "to harass, hunt, capture, or kill, or attempt to harass, hunt, capture, or kill any marine mammal(16 U.S.C. § 1362 (13)). In 1994, Congress amended the MMPA to include Section 118, which establishes a regime to regulate the take of marine mammals incidental to commercial fishing so that it does not occur at a level that jeopardizes a marine mammal stock's ability to reach its "optimum sustainable population," defined as "the number of animals which will result in the maximum productivity of the population or the species, keeping in mind the carrying capacity of the habitat and the health of the ecosystem of which they form a constituent element" (16 U.S.C. § 1362(9)).

Section 118 of the MMPA requires that NMFS classify each U.S. fishery according to whether there is a frequent (Category I), occasional (Category II), or remote (Category III) likelihood of incidental mortality and serious injury to marine mammals. It also establishes take-reduction teams to develop take reduction plans (TRPs) for those fisheries with the greatest impact on marine mammal stocks (Category I and Category II).

The MMPA establishes both a short-term (6-month) and long-term (5-year) goal for marine mammal bycatch reduction. TRPs are required to reduce, within 6 months of implementation, the incidental mortality or serious injury of marine mammals incidentally taken in the course of commercial fishing operations to levels less than a stock's potential biological removal[2] (PBR) level. Within five years of implementation, TRPs are required to reduce incidental mortality or serious injury of marine mammals incidentally taken in the course of commercial fishing operations to insignificant levels approaching a zero mortality and serious injury rate, taking into account the economics of the fishery, the availability of existing technology, and existing state or regional fishery management plans (16 U.S.C. § 1387(f)).

Participants in Category I or II fisheries are required to register with NMFS, take on board an observer if requested by NMFS to do so, and to comply with all applicable TRP regulations. All fishermen, including those participating in Category III fisheries, are required to report the incidental mortality and serious injury of marine mammals should it occur.

2.4 Migratory Bird Treaty Act

---

[2] The term "potential biological removal level" means the maximum number of animals, not including natural mortalities, that may be removed from a marine mammal stock while allowing that stock to reach or maintain its optimum sustainable population. The potential biological removal level is the product of the following factors: (A) The minimum population estimate of the stock; (B) One-half the maximum theoretical or estimated net productivity rate of the stock at a small population size; and (C) A recovery factor of between 0.1 and 1.0. (16 U.S.C. 1362(20)).

The taking of migratory seabirds is governed by the Migratory Bird Treaty Act, which is administered by the Department of the Interior. The MBTA establishes a Federal prohibition, unless permitted by regulations, to "pursue, hunt, take, capture, kill, attempt to take, capture or kill, possess, offer for sale, sell, offer to purchase, purchase, deliver for shipment, ship, cause to be shipped, deliver for transportation, transport, cause to be transported, carry, or cause to be carried by any means whatever, receive for shipment, transportation or carriage, or export, at any time, or in any manner, any migratory bird, included in the terms of this Convention . . . for the protection of migratory birds . . . or any part, nest, or egg of any such bird." (16 U.S.C. 703). Regulations issued by the Dept. of Interior provide for permits to be issued for the salvage of incidentally taken migratory birds, including seabirds, and for the periodic reporting of salvaged birds by permit holders.

Several seabird species, such as the marbled murrelet and short-tailed albatross, are protected under the Endangered Species Act, as well. In cooperation with the Department of the Interior's U.S. Fish and Wildlife Service, NMFS monitors and reports the bycatch of these and other seabirds. Additionally, international conventions and treaties also play a significant role in the national approach to bycatch management. For example, the Food and Agriculture Organization of the United Nations, Committee on Fisheries, developed the International Plan of Action for Reducing Incidental Catch of Seabirds in Longline Fisheries. This plan is being implemented by NMFS and other fishing countries via corresponding National Plans of Action.

3. Regional Characteristics of Bycatch

3.1 Southwest Region

Fisheries of particular importance to the Southwest Region include coastal pelagic species fisheries, the drift gillnet fishery for swordfish and the tunas purse seine fleet.

The coastal pelagic species (CPS) fishery targets northern anchovy, jack mackerel, Pacific sardine, and Pacific mackerel. CPS vessels fish with encircling nets, targeting a specific school and the most common incidental catch in the CPS fishery is another CPS species. Few measures have been proposed to minimize bycatch (e.g., the use of grates to cover openings of holds through which fish are pumped). In California, limited amounts of information are available from at-sea observations; the bulk of bycatch data is derived from port sampling. When the sardine fishery was initiated off Washington and Oregon, the states implemented observer programs specifically to assess bycatch. The precision and accuracy of these data have not been assessed; however the reported levels of bycatch support the view that bycatch of vulnerable species is not significant. For example, the bycatch of salmon observed in the Washington and Oregon sardine fishery in 2002 amounted to 1,800 fish. The landed catch of chinook and coho in the 2002 ocean salmon fisheries exceeded 400,000 fish off Washington and Oregon.

The California/Oregon Drift Gillnet (DGN) fishery targets swordfish and thresher shark. It had been classified as a Category I fishery under the MMPA as result of interactions with marine mammals, some of which are listed under the ESA, but was reclassified as Category II in 2003 due to successful bycatch reduction efforts.

Since 1980, with the exception of a few years, the California Department of Fish and Game and NMFS have conducted an observer program to collect data on the bycatch of protected species. The DGN fishery was the subject of the Pacific Offshore Cetacean Take Reduction Plan, implemented in 1997 to address incidental takes of beaked whales, pilot whales, pygmy sperm whales, sperm whales, and humpback whales in the DGN fishery. The Take Reduction Plan, which required the use of pingers, 36 feet net extenders, and mandatory skipper education workshops, reduced marine mammal entanglements by an order of magnitude in its first two years of implementation.

In 2000, NMFS conducted an internal ESA Section 7 consultation on the DGN fishery and evaluated the incidental take of listed sea turtles and marine mammals by the DGN fishery. The opinion found the incidental take was likely to jeopardize the continued existence of certain populations and specified a reasonable and prudent alternative under which the fishery could operate. NMFS authorized the take of nine leatherback turtles in three years, and similarly low numbers of loggerhead turtles, and took the unusual step of implementing fishery time-area closures under ESA regulations to ensure these levels were not exceeded. NMFS determined that the DGN fishery, operating under the Take Reduction Plan, will have a negligible effect on listed marine mammals in 2000.

As with most pelagic gillnet fisheries, the bycatch of non-target species in the DGN fishery is high (non-target bycatch includes common mola, blue shark, skipjack and mackerel). Eighty percent of the molas are released alive and the majority of the tuna is landed.

The U.S. policy regarding the bycatch of marine mammals was in large part defined by the purse seine fishery for tuna in the Eastern Tropical Pacific Ocean (ETP). In the 1960s the practice of

setting nets around dolphins to harvest tuna swimming below was developed in the ETP. From 1970 to 1980 the purse seine fishery expanded, dominated by the U.S. Annual dolphin mortality was listed at over 350,000. In 1972 Congress ratified the MMPA, primarily due to the public reaction to the high levels of dolphin mortality associated with the ETP tuna fishery. During the 1980s a progressive relocation of the U.S. fleet to the Central Western Pacific occurred as a result of U.S.-Latin America tuna relations, the 1982/83 El Niño event, and limits imposed through the MMPA on the incidental kill of dolphins in the ETP. In 1980, the U.S. fleet consisted of 126 seiners, 25 bait boats and four jig boats with a combined capacity of 118,000 mt. By 1994, only 4 U.S. flag seiners were active in the ETP with a combined carrying capacity of less than 6,000 mt.

Mexico and Ecuador are now the dominant participants in the fishery. A small number of large U.S. purse seine vessels (greater than 400 short tons carrying capacity) continue to fish the ETP under jurisdiction of the Inter-American Tropical Tuna Commission (IATTC) and governed by the Agreement on the International Dolphin Conservation Program. In 2001, 5 large U.S. tuna purse seine vessels participated in the fishery out of a total of 140 vessels. The IATTC reports annual estimates of fin fish and dolphin mortality by species and stock, as well as standard errors associated with the estimates for all vessels classes. No U.S. vessels currently fish on dolphins. All large U.S. vessels carry observers while fishing, and the accuracy and precision of bycatch estimates are accordingly high. While U.S. participation in the fishery has all but disappeared, the bycatch of dolphins in the ETP tuna fishery remains a controversial issue (e.g., the recent redefinition of the "Dolphin Safe" designation). NMFS continues its efforts, through its support of the IATTC and international agreements, to reduce bycatch by U.S. and foreign flag vessels.

The Pacific Fishery Management Council is currently developing mechanisms to address bycatch in fisheries under their jurisdiction; specifically, it is developing an FMP on west coast highly migratory species with particular interest in bycatch of turtles and seabirds in pelagic longline fisheries.

3.2 Southeast Region

Southeast fisheries (North Carolina to Texas and the US Caribbean) generate about one billion dollars in ex-vessel revenue per year (NMFS 2001). Fisheries of the Southeast reflect the very diverse fauna of the region, with relatively few large fisheries and many small fisheries. The fisheries have catches from more than 200 stocks of fish and fishery resources.

Two fisheries dominate economically. The menhaden purse seine fishery is the volume leader in the Southeast, with annual landings approaching two billion pounds. About 60% come from the Gulf of Mexico and 40% from the Atlantic. The shrimp trawl fishery generates the largest revenue regionally, and sometimes nationally. The Gulf of Mexico shrimp fishery accounts for about 75% of the entire U.S. wild shrimp production. About half the commercial value of fisheries other than shrimp and menhaden consists of shellfish fisheries (blue crabs, oysters, and other invertebrates), generally harvested from state waters, and managed by the states. The remainder of the commercial harvest consists of finfish from many stocks; including reef fish (red snapper, red grouper, etc.); coastal pelagic (e.g., king and Spanish mackerel), and oceanic pelagics (sharks, swordfish, and tunas).

Marine recreational fishing is a very important part of the Southeast harvest. Typically, 4-6 million participants make 30-40 million trips annually. The magnitude of recreational participation in the Southeast is much larger than other regions in the US. The bulk of recreational harvest consists of small fish from the drum family (croakers and seatrouts), but many of the prized commercial species are also prized by recreational fishermen (e.g., red snapper and other reef species, and king and Spanish mackerel). This shared usage makes every conservation issue an allocation issue as well.

Partnerships with other fishery management agencies (e.g., state fishery management agencies, interstate marine fisheries commissions, state Sea Grant College programs, and the Gulf and South Atlantic Fishery Development Foundation) have been crucial to addressing bycatch issues in the Southeast Region. Efforts in this region pre-date many of the regional and national workshops held in other areas of the country.

The Southeast formally began to address finfish bycatch in the shrimp trawl fishery in 1990 and developed a strategic research document focusing on this important issue. Previously, gear research had focused on excluding sea turtles from trawls through the development of turtle excluder devices (TEDs). The bycatch strategic document led to implementation of a formal Regional Research Program, coordinated by the Gulf and South Atlantic Fishery Development Foundation. The major components of the program were observer programs to quantify bycatch mortality, and gear technology research and development to reduce finfish bycatch. A four-phase development program for bycatch reduction devices for shrimp trawls was successfully used under the Regional Research Program structure to develop several BRD designs that are used in the fishery. Establishing and maintaining the distinction among these four phases proved surprisingly useful, both to the orderly progression of candidate gear through the development program, and to communicating the nature of different types of data and research. Within this framework, actual research and development of candidate devices have been carried out independently by NMFS, Sea Grant, state agencies, universities, and industry, drawing on a variety of funding sources, primarily the Saltonstall-Kennedy (S-K) and MARFIN (Marine Fisheries Initiative) grants programs.

Bycatch characterization and reduction research has been conducted for other fisheries in the Southeast, but not through a formal cooperative program structure as for shrimp. Longline fisheries for tuna, swordfish, and sharks have a history of observer programs for general characterization of the fisheries, including bycatch.

The observer coverage of the pelagic longline fishery, which targets swordfish and tuna species, is monitored by the NMFS Highly Migratory Species (HMS) Management Division in Silver Spring, MD and the Southeast Fisheries Science Center. A mandatory observer program has been in place since 1992, at which time there were approximately 350 active vessels. There are currently between 130 and 150 vessels actively participating in the fishery and they work out of ports that range along the Atlantic coast from Portland Maine to Key West Florida, along the Gulf from Key West to Brownsville, Texas, and from Puerto Rico to 5 degrees North latitude.

The program has always had a target coverage level of five percent (5%) of the U.S. fleet within eleven geographical areas of the North Atlantic Ocean (Atlantic waters north of 5 degrees North Latitude), as was agreed by the US in the International Commission for the Conservation of Atlantic Tunas (ICCAT). Starting in 2002, the program began requiring an eight percent (8%) coverage rate. Actual coverage levels achieved from 1992-2002 have ranged from 2-6% depending on quarter and year. Data collection priorities have remained the same since the inception of the program. The primary goal of the program is to collect catch and effort data of the U.S. pelagic longline fleet on highly migratory fish species, although information is also collected on bycatch of protected species (mammals, turtles, and seabirds).

NMFS, in cooperation with the U.S. pelagic longline fishery, implemented a three-year research program in the Western Atlantic Ocean to develop and evaluate sea turtle mitigation measures. Five potential mitigation techniques were evaluated during 687 research sets in 2001 and 2002. Data were collected to evaluate the effectiveness of the mitigation measures and to investigate variables that affect sea turtle interaction rates with pelagic longline gear. A significant reduction in loggerhead catch may be achieved by reducing daylight soak time. 18/0 circle hooks and mackerel bait were found to

significantly reduce both loggerhead and leatherback sea turtle interactions when compared with industry standard J hooks and squid bait. Also, circle hooks significantly reduced the rate of hook ingestion by the loggerheads, reducing the post-hooking mortality associated with the interactions. The combination of 18/0 circle hooks and mackerel bait was found to be the most efficient mitigation measure for both loggerhead and leatherback turtles. Mackerel bait was found to be more efficient for swordfish than squid bait and circle hooks were more efficient for tuna than J hooks.

The directed shark gillnet fishery developed off the east coast of Florida and Georgia in the late 1980's and is classified as a Category II fishery under the MMPA because of occasional marine mammal takes. There is also a concern about interaction with protected sea turtles. Vessels operating in the fishery are typically from 12.2-19.8 m in length. The nets (both nylon multi-filament and monofilament) used are from 275-1,800 m long and 3.2-4.1m deep, with stretched mesh from 12.7-29.9 cm. The most common type of net is drift gillnet, wherein the vessel basically sets a gillnet in a straight line off the stern. The net soaks or fishes at the surface for a period of time, is inspected at various occasions during the soak, and then hauled onto the vessel when the captain/crew feel the catch is adequate. It is usually a nighttime fishery and takes place between 3 and 9 nautical miles from shore. The other type of gear utilized is strike-netting, wherein the vessel takes uses a gillnet to encircle a school of sharks. This is done usually during daylight hours, using visual sighting of shark schools from the vessel and/or a spotter plane. The gear is encircled around the sharks, but is otherwise hauled back onto the vessel without much soak time. Between five and eleven vessels operated in this fishery from 1993-98. Currently, between four and six are operating. An observer program for this fishery has been in place from 1993-1995 and 1998-2002. The objectives of this program are to obtain estimates of catch and bycatch and bycatch mortality rates of protected species (sea turtles and marine mammals), juvenile sharks, and other fish species in waters of the US southeast US coastal shark gillnet fishery. Catch and bycatch estimates are gathered to meet the mandates of the Atlantic Large Whale Take Reduction Plan and the Biological Opinion issued under requirements of the Fishery Management Plan for Highly Migratory Species.

MARFIN and S-K grants have also funded characterization research on bycatch in the menhaden purse-seine fisheries of the Gulf and Atlantic coasts. The menhaden industry has already developed some gear innovations to release bycatch alive during harvest.

Estimates of fish caught, but not retained, in recreational fisheries are made through the national Marine Recreational Fisheries Statistics Survey (MRFSS) program for much of the Southeast Region. There have been S-K awards for short-duration projects assessing recreational bycatch in some geographic areas not covered by MRFSS. A number of MARFIN and S-K grants have been awarded to examine mortality of hooked and released fish. Species addressed include red snapper, red grouper, king and Spanish mackerel, and sharks. Short-duration observer programs have been conducted in some areas in the Gulf of Mexico to examine bycatch of the commercial hook-and-line fishery for reef fish. Short-term research has been conducted on bycatch in trap fisheries for finfish and crustaceans, with most projects focused on developing escape structures for unwanted or prohibited catch, and for reduction of ghost fishing by lost traps.

Evaluations of impacts of bycatch on the fish stocks, and thus on directed fisheries, are made through traditional stock assessments whenever estimates of bycatch are available. Evaluations of the effects of bycatch in the shrimp fisheries are most advanced. Incorporation of bycatch information from other fisheries in stock assessments is often less adequate due to lack of time series estimates for bycatch.

3.3 Northwest Region

Fisheries of the West Coast (coastal California, Washington and Oregon) target several species of groundfish and salmon, while anchovy, sardines, mackerel, shrimp, crab, squid, and other shellfish and molluscs provide other important fishing opportunities. These fisheries are harvested using a variety of gear types (trawls, seines, pots, hook and line, etc.) that produced about 338,000 metric tons (mt) during 2002, and had an ex-vessel value of approximately $229 million (PacFIN 2003).

Pacific whiting, the largest proportion of groundfish landed on the West Coast, are taken by large mid-water trawl and catcher/processor vessels that have replaced the foreign and joint-venture fleets of the 1970 and 1980s. The At-sea Whiting Observer Program has provided information on the bycatch of salmon and on the bycatch of other groundfish species in the at-sea whiting fishery since the early 1990's. The shoreside whiting fishery is sampled by sampling programs run by each state. Further at-sea monitoring of shoreside whiting is being explored for the 2004 season. Some species of rockfish, such as yellowtail rockfish and Pacific Ocean perch, are occasionally taken as bycatch in large numbers, but are accounted for by the monitoring programs. Marine mammal bycatch in the Pacific whiting midwater trawl fishery is also monitored. Since 1990, limited mortality takes have included individuals from six marine mammal species, specifically, California sea lion, Steller sea lion, harbor seal, northern elephant seal, Pacific white-sided dolphin, and Dall's porpoise. During the 2002 fishing season, observers reported a marine mammal mortality take of three marine mammals, a level that is not considered significant.

The bottom trawl fishery targets individual rockfish, flatfish, roundfish species, and different species complexes of rockfish, as well as the deep-water complex consisting of thornyheads rockfish, Dover sole, and sablefish. Fish caught are brought back to shoreside plants for processing. Vessels discard groundfish at-sea for many reasons, including discards made to comply with regulatory constraints and discards made because a portion of the catch is economically undesirable. In the past, information on bycatch has been derived from a variety of sources, primarily research studies or other short-term programs that sampled at-sea discards on only a small portion of the bottom trawl fleet. However, the West Coast Groundfish Observer Program (WCGOP) began collecting at-sea data on bottom groundfish trawlers in August 2001 and aids in monitoring the total removals by the fishery which is an important component of any fishery analysis program. In the bottom trawl fishery, total landed catch is monitored by the state-run fish sales ticket system.

The primary economic management objective for groundfish management on the West Coast is to have seafood processors provide a continuous, year-round flow of fish to fresh fish markets to produce a variety of benefits, including promoting continuous employment in coastal communities. However, overcapitalization, increased effort, and either declining or stable total allowable catch have resulted in the need to significantly slow catch rates to spread the catch of each species or species complex for which there is a specified optimum yield (OY) over the entire year.

The Pacific Fishery Management Council has chosen trip-landing limits as the vehicle to slow the catch rates. Because almost all species managed by trip limits are harvested in a multispecies mixture with other trip-limit species, vessels are forced to discard species once the trip limit for that species is reached, while the vessel continues to fish on the trip limit for other species. As trip limits become more restrictive and as more species come under trip-limit management, regulatory discards increase. Most species are managed under two-month cumulative trip-landing limits.

Trip limit induced discards also can occur when fishermen continue to harvest other species when the OY of a single species is reached and further landings of that species are prohibited. Discretionary discards of unmarketable species or sizes were known to occur widely in the bottom trawl fishery and were largely unmeasured until the establishment of the coast wide observer program (WCGOP).

The other major West Coast bottom trawl fishery is the shrimp trawl fishery. Bycatch discards in the shrimp trawl fishery are known to include groundfish species, Pacific halibut, chinook salmon, and squid. Although the amount of groundfish bycatch in the shrimp trawl fishery is unknown because of the lack of an at-sea sampling program, its existence is recognized. Over the past several years, Saltonstall-Kennedy grant funds were used to develop and test finfish excluder devices for the shrimp trawl fishery. This fishery is state-managed and all three west coast states now require fishery participants to use finfish excluder devices.

Other groundfish fisheries include bottom longline and pot (fish trap) fisheries for sablefish, other line (vertical longline, etc.) fisheries for rockfish and bottom gill nets for rockfish. Very little is known about the amount of bycatch, discard, and discard mortality in these fisheries. Similarly, we have little information on the biological and socio-economic effects of bycatch and discards in these fisheries. The WCGOP is currently observing commercial fixed gear vessels to aid in assessing their biological impact.

The five species of Pacific salmon support important commercial, recreational, and tribal fisheries in the states of Washington, Oregon, California, and Idaho. Commercial, recreational, and tribal fishermen harvest salmon from the Pacific Ocean, Puget Sound, estuaries, and rivers along spawning migration routes using trolling gear, seines, gill nets, and hook and line. Harvests have been declining as habitat degradation and overfishing have threatened specific populations of salmon. Several species of salmon have been or are proposed for listing under the Endangered Species Act. The federally managed ocean salmon fisheries are divided into commercial troll and recreational fisheries. Both groups use hook-and-line gear. Inside-water commercial fisheries, which are managed by the states and treaty tribes, use gill nets and purse seines. Bycatch in the ocean commercial troll and recreational salmon fisheries has two major components. The first is the catch and discard of depressed or endangered salmon species, for which there is no total allowable catch in a mixed-stock fishery with other salmon species. The second is the catch and discard of salmon species either coastwide or by management area, where the quota for one species of salmon is taken before the quota for the other species.

Recreational angling is important to the West Coast fisheries; anglers reportedly spend about $850 million each year in the West Coast fisheries. Recreational fisheries include those for salmon, Pacific halibut and groundfish species. West Coast recreational salmon catch was over 610,000 fish in 2002 (RecFIN 2003) and total Pacific halibut sport quota is set at 224.3 mt (IPHC 2003) for 2003. The bycatch and discard rates in these fisheries have not been thoroughly assessed, but are significant for some species such as lingcod and most nearshore groundfish species. Limited monitoring data is collected by the states in these fisheries.

3.4 Alaska Region

There are FMPs for the Bering Sea/Aleutian Islands area (BSAI) and Gulf of Alaska (GOA) groundfish fisheries, the BSAI crab fisheries, the Alaska scallop fishery, and the salmon troll fishery in the EEZ off Southeast Alaska. In addition, the Alaska halibut fishery is managed under federal regulations and NMFS is responsible for monitoring the incidental takes of marine mammals in state managed fisheries that have been designated as Category I or II fisheries under the MMPA. This section focuses on the bycatch problems for all living marine resources in the BSAI and GOA groundfish fisheries and the halibut fishery and on the bycatch of marine mammals in the state managed Category II fisheries (there are no Category I fisheries in Alaska). There are two reasons for this. First, the FMPs for the crab, scallop and EEZ salmon fisheries defer most management authority,

including basically all bycatch monitoring and management authority, to the State of Alaska. Second, with respect to the state managed Category II fisheries, the management responsibilities and authorities of NMFS are limited to marine mammals. In those fisheries, monitoring and controlling the bycatch of other living marine resources is principally a stewardship responsibility of the State of Alaska or the U.S. Fish and Wildlife Service (USFWS).

A variety of factors both contribute to the bycatch problems in the Alaska groundfish and halibut fisheries and the state managed MMPA Category II fisheries and make them more difficult to solve. The factors included are: (1) the multi-species nature of the bycatch problem; (2) limited information concerning the biological, ecological, social, and economic effects of alternative methods for reducing bycatch; (3) substantial excess harvesting capacity; (4) the use of the race for fish to allocate quotas among competing fishing operations; and (5) the external benefits and costs associated with bycatch.

Groundfish Fisheries

In the 1980s, joint-venture and domestic fisheries rapidly replaced the foreign fisheries that had accounted for more than 90% of the Alaska groundfish catch; and then the domestic fisheries displaced the joint-venture fisheries. In joint-venture fisheries, domestic fishing vessels delivered groundfish catch directly to foreign processing vessels on the fishing grounds. The last foreign and joint-venture groundfish fisheries in the EEZ off Alaska occurred in 1986 and 1990, respectively.

Groundfish stocks (which include pollock, Pacific cod, sablefish, rockfish, flatfish, and Atka mackerel) generally are in a healthy condition. All Alaska groundfish stocks have fluctuated in abundance over the years, but no widespread trend toward decline is evident. None are overfished, and overfishing is not occurring. This is in part the result of efforts to set conservative quotas and to prevent them from being exceeded. For example, in 2002 the total harvest of Alaska groundfish species (2.10 million t) was only about 59% of the acceptable biological catch (3.58 million t) and was about 94% of the total allowable catch (2.24 million t).

In 2002, the retained catch of 1.96 million t resulted in ex-vessel revenue of about $570 million and $1.5 billion in revenue for seafood processors. Trawl, hook and line (including longline and jig gear), and pot gear account for virtually all the catch in the BSAI and GOA groundfish fisheries. The selectivity of each gear type in the multi-species groundfish fisheries varies by gear configuration, target species, area, and time of year. In recent years, trawl fisheries on average accounted for about 90% of the total groundfish catch; however for some species, such as Pacific cod and sablefish, substantially more than 50% of the catch is taken with fixed gear (principally longline gear). There are catcher vessels and catcher/processor vessels in the trawl, longline and pot fisheries. In 2002, catcher vessels less than 60 feet in length accounted for about 1% of the total groundfish catch, larger catcher vessels took about 46% to the total, and catcher/processors took about 53% of the total.

The bycatch of the non-groundfish species, such as crab, salmon, halibut, and herring, and the takes of marine mammals have been an important management issues and monitored since before the MSA. More recently, the discards of groundfish, including the major and minor groundfish species, and the bycatch of seabirds (including the short-tailed albatross, an endangered species) have become important management issues. The North Pacific Fishery Management Council (NPFMC) has recommended and the Agency has implemented a broad range of management measures that were designed at least in part to monitor and reduce bycatch in the groundfish fishery. The management measures include a large observer program, groundfish quotas that are set and monitored in terms of total catch, time and area closures, gear restrictions, gear allocations, full retention requirements for pollock and Pacific cod, prohibitions on the retention of some non-groundfish species, bycatch limits for

some non-groundfish species, reduced quotas for some groundfish species, careful release requirements for halibut bycatch in the longline fisheries, bird bycatch avoidance regulations for the longline fisheries, fishery closures when groundfish or non-groundfish quotas are taken, individual fishing quotas for the fixed gear sablefish and halibut fisheries, and American Fisheries Act cooperatives for the BSAI pollock fishery. The following comparisons of catch and bycatch estimates for 1996 and 2002 for the BSAI and GOA groundfish fisheries provide an indication of the success of the bycatch reduction measures. Although total groundfish catch increased by 2.5%, groundfish discards decreased by 50%, the discard rate for groundfish decreased to 6.8%, halibut bycatch mortality decreased by 8%, herring bycatch decreased by 91%, salmon bycatch decreased by 15%, and crab bycatch decreased by 52%. Although the bycatch rates in the Alaska groundfish fishery are relatively low compared to most other major fisheries in the U.S. or elsewhere, the absolute levels of bycatch are high due to the size of the groundfish fishery. In 2002, bycatch (i.e., discards) in the groundfish fisheries included about 142,000 t of groundfish, 6,100 t of halibut mortality, 137,000 (individual) salmon, 133 t of herring, and almost 3 million (individual) crab (mostly snow and Tanner crab).

Data provided by the Observer Program is a critical element in the conservation and management of groundfish, other living marine resources, and their habitat. For example, these data are used for: (1) assessing the status of groundfish stocks; (2) setting groundfish quotas and monitoring them for in-season management; (3) monitoring the bycatch of non-groundfish species for in-season management; (4) assessing the effects of the groundfish fishery on other living marine resources and their habitat; and (5) assessing methods for improving the conservation and management of groundfish, other living marine resources and their habitat. The Observer Program also provides the industry with bycatch data it needs to make timely fishing decisions that decrease bycatch and increase productivity. In addition, the Observer Program resulted in fundamental changes in the nature of the bycatch problem. First, by providing good estimates of total groundfish catch and non-groundfish bycatch by species, it eliminated much of the concern that total fishing mortality was being underestimated due to fish that were discarded at sea. Second, it made it possible to establish, monitor and enforce the groundfish quotas in terms of total catch as opposed to only retained catch. For the groundfish fisheries, this means that both retained catch and discarded catch are counted against the total allowable catches (TACs). Third, it made it possible to implement and enforce bycatch quotas for the non-groundfish species that by regulation had to be discarded at sea. Finally, it provided extensive information that managers and the industry could use to assess methods to reduce bycatch and bycatch mortality. In summary, the observer program generally provided fishery managers with the information and tools necessary to prevent bycatch from adversely affecting the stocks of the bycatch species. Therefore, the bycatch in the groundfish fishery is principally not a conservation problem but it can be an allocation problem. Although this does not make it less controversial, it does help identify the types of information and management measures that are required to address the bycatch problem.

In 2002, there were approximately 35,000 observer deployment days, including over 30,000 deployment days on catcher vessels, catcher/processors and motherships. The fishing and processing operations paid more than $12 million to observer providers for those 35,000 observer deployment days. In 2001, vessels with observers onboard accounted for almost 90% of the total groundfish catch in the BSAI and about 34% of the total in the GOA. However, for some areas and gear types, vessels of less than 60 feet account for most or all of the catch and there is no observer data for those vessels. Two other concerns with respect to the quality or availability of observer data are: (1) the lack of random placement of observers on vessels that are required to have observers less than 100% of their fishing days and (2) the ability of the observers to provide accurate bycatch estimates for species either for which bycatch is a very rare occurrence or for which species identification is very difficult.

In addition to the management measures that have been implemented to reduce bycatch, gear technology research and research on the behavioral responses of fish both to fishing gear and to the

stresses imposed by coming in contact with fishing gear have been contributed substantially to efforts to address the bycatch problem. Species-specific differences in the response to fishing gear have been identified and used to develop gear modifications that increase the escapement of juvenile fish and other fish that would be discarded if they did not escape. Much of this research has been conducted by NMFS in cooperation with the industry and universities.

Halibut Fisheries

Commercial and recreational fisheries exist for halibut off Alaska. These are hook and line fisheries and the vast majority of the commercial catch is taken with longline gear. The International Pacific Halibut Commission (IPHC) has the primary responsibility for managing the halibut resource off Alaska. Under authority of the North Pacific Halibut Act, NMFS is authorized to develop regulations that are in additional to, but not in conflict with, regulations adopted by the IPHC. The NPFMC developed an individual fishing quota (IFQ) program for the commercial Alaska halibut fishery in 1992. NMFS implemented the program in 1995. Under the IFQ program, individual fishermen were assigned a quota share based on past participation in the fishery and other criteria developed by the NPFMC. The annual halibut quota established by the IPHC is allocated among fishermen based on their individual quota shares. These quota shares are transferable harvest privileges within specified limitations. Under the IFQ program, fishermen are able to harvest their halibut IFQ whenever and however such harvest is most economical to their fishing operation, subject to program limitations and seasons. The higher catch limits in recent years reflect healthier stock conditions. Commercial halibut fishery landings in 2002 were almost 61 million pounds and generated ex-vessel revenue of about $130 million.

The halibut fishery does not have an observer program to monitor bycatch. However, logbook data are used by the IPHC to estimate adult halibut mortality due to lost/abandoned gear in the halibut fishery and the IPHC stock assessment surveys collect bycatch data for undersized halibut and for other species. In addition, bycatch data are available for joint groundfish and halibut trips for which there is a groundfish observer. The uncertainty concerning the level of bycatch of some groundfish species, such as demersal shelf rockfish, is a concern. Seabird bycatch mortality is of concern, and gear and fishery operation regulations are used to reduce seabird bycatch.

MMPA Category II Salmon Fisheries

Over ten Alaska salmon fisheries are classified as Category II fisheries under the MMPA. An observer program in the Prince William Sound, Cook Inlet, and Kodiak Island salmon drift and set gillnet fisheries documented seabird bycatch and incidental takes of marine mammals. Results confirmed the Category II classification of most of the observed fisheries, and reclassified two fisheries to Category III. NMFS is currently developing a more comprehensive observer program for other Alaska salmon fisheries with the primary focus of determining the nature and extent of marine mammal interactions in these fisheries; seabird and other bycatch information will also be collected.

The MMPA sets out several goals for which observer data is used: 1) determination whether the potential biological removal level of a stock is exceeded; 2) categorization of each fishery in the annual List of Fisheries; and 3) determination of whether a fishery has approached a zero mortality rate for marine mammals. These goals each require an increasing level of precision and accuracy in estimates of serious injury and mortality. Determination of appropriate observer coverage levels to meet the needs of accuracy and precision is currently the subject of serious interest to NMFS' National Observer Program Advisory Team, and specific coverage levels for this program still need to be assessed. Currently, the Alaska marine mammal program observes state-managed salmon fisheries on a rotational basis, with one or two fisheries observed per year for two consecutive years each at

approximately 5% coverage. With over ten Category II fisheries to monitor for marine mammal bycatch, ten or more years may elapse before a fishery is observed again. Trends in fishery operations and marine mammal populations can change significantly in the intervening years, easily rendering observer data out of date; accuracy and precision of estimates are difficult to achieve on this schedule as well. The program would ideally observe fisheries more frequently (probably no more than five years between observing a single fishery) and for more than two consecutive years in each rotation (probably 3-4 consecutive yrs). The current limiting factor in the development of this program is funding. Due to the remoteness of many of the fisheries, the average cost of observing one fishery is over $1 million per year, although cost savings can be realized in combining concurrent observation of geographically proximal fisheries.

There is a federal FMP for the relatively small salmon troll fishery in the EEZ off Alaska; however, the FMP defers management to the State of Alaska. All other salmon fisheries are strictly state managed. The management of the Alaska salmon fisheries is based on optimal sustainable yield and typically has resulted in healthy salmon stocks. Management of the Alaska salmon fishery strives to protect, to the extent possible, any depressed stock, including those originating south of the Alaska border.

Commercial fishing is conducted in both state and federal waters by about 5,000 relatively small fishing vessels or boats using troll, drift gill-net, set gill-net, and purse-seine gear. All five Pacific salmon species are harvested by commercial, recreational, and subsistence fishermen. In 2002, about 610 million pounds of salmon were landed in the commercial fishery with an ex-vessel revenue of about $130 million. Due principally to depressed prices, this is the lowest ex-vessel revenue for the Alaska salmon fisheries in more than 20 years.

The intercepts of salmon, including ESA-listed Pacific Northwest stocks, passing through the marine waters off the coast of Alaska on their way to more southerly spawning grounds were the focus of lengthy negotiations and debate among Alaskan, Canadian, and Pacific Coast fishermen, management agencies, and governments. The Northwest Region has the lead for protecting the ESA-listed Pacific Northwest salmon stocks.

3.5 Northeast Region

Northeast fisheries are diverse both with respect to the species sought and the gear types employed. Fisheries for invertebrate species including American lobster, sea scallop, and Atlantic surfclam are currently the most valuable in the Northeast Region. Lobster landings are mostly taken with baited traps, with about 70% of landings from the Gulf of Maine. Sea scallop landings are derived principally from dredge fisheries (particularly on Georges Bank and in the Middle Atlantic). Fish species such as monkfish and menhaden also generate substantial revenues. The greatest volume of landed fish is derived from small pelagics (menhaden and Atlantic herring). Groundfish fishing is primarily by otter trawling, which accounts for about 70% of landings. In the Gulf of Maine, otter trawl target species include gadoids and flatfishes. Fixed-gear fisheries using gill nets and longlines target primarily cod, pollock, white hake, dogfish, and monkfish are also used. On Georges Bank, gadoids, flatfish and mixed groundfish species are generally targeted. In Southern New England, groundfish fisheries primarily target whiting, yellowtail flounder, winter flounder, and monkfish. In the Middle Atlantic, groundfish trawling targets summer flounder, scup, black sea bass, monkfish, winter flounder, tautog, and a variety of other species.

Regulatory discards (i.e., discard of undersized or trip-quota limited stocks) are an important issue in the Northeast region's groundfish fisheries. Historically, managers often selected minimum legal

sizes for groundfish that resulted in the selection of undersized fish, given the characteristics of nets used in the fishery, often resulting in substantial discards. Regulatory discards also occur when catches of certain stocks are limited by trip quotas. Discards of finfish and shellfish can represent a significant proportion of the catch, and represent an important source of fishing-related mortality. Management programs that control fishing mortality rates have been adopted for most of the region's fisheries. It is anticipated that with sufficient effort reduction, combined with other management regulations, the fisheries will become less dependent on incoming recruitment, thus reducing the potential catch of undersized animals and regulatory discards.

Trip limits contribute to the discarding of some species (e.g., summer flounder, haddock, and Atlantic cod). Trip limits for summer flounder are invoked when individual states approach their allocated share of region-wide total allowable catch (TACs). Minimum size regulations, as well as economic factors contribute to relatively high discard rates in a number of Mid-Atlantic fisheries, especially for scup and, to some extent, black sea bass.

Small-mesh fisheries in the Northeast Region have undergone a great deal of scrutiny as managers have sought to minimize the catch of undersized groundfish, particularly in trawl fisheries. The trawl fishery for northern (pandalid) shrimp now requires the use of finfish excluder devices, which, when fished properly, reduces the overall proportional weight of non-shrimp catch, particularly of flatfish and gadoids.

Other small-mesh trawl fisheries of the region targeting silver and red hakes, herring, mackerel, squids, butterfish, ocean pout, and dogfish are subject to a performance criterion of less than or equal to 5% of the total catch comprised of regulated groundfish species (e.g., cod, haddock, redfish, pollock, white hake and five flounder species). On Georges Bank, a small-mesh fishery is allowed for whiting, but only in prescribed time periods and locations. Some fisheries have been curtailed altogether or geographically restricted to meet this performance criterion. Squid fisheries in the mid-Atlantic and southern New England potentially generate discards of a number of commercial species.

Bycatch is an important consideration in allocation decisions among different gear sectors in the fishery. For example, Atlantic cod are targeted primarily by three gear types—otter trawls, gill nets, and demersal longlines. Mobile gears tend to have the highest overall discard rates. Gill nets using appropriate mesh are generally more selective than either trawls and hooks. Gear sectors are in competition for small overall target TACs for cod, and regulations are likely to change the relative proportions of the catch derived by the various gear types.

Takes of marine mammals and sea turtles are problematic in several of the region's fisheries. Bottom-tending gillnet fisheries targeting groundfish in the Gulf of Maine and Southern New England entangle harbor porpoise in numbers sufficient to be of concern to the long-term stability of the harbor porpoise resource. Gillnet fisheries in the Gulf of Maine also entangle large whales, including the endangered right whale. Take reduction team activities have been focused on these fisheries to reduce interactions. Gillnet fisheries also result in mortalities of some seabirds, including shearwaters, gulls, and gannets. Middle Atlantic coastal gillnet fisheries also take harbor porpoises and bottlenose dolphins.

Although infrequent, entanglements of whales in lobster gear are of particular concern. Given the status of right whales, any fishing activities that generate mortalities of this species are subject to mitigation measures. Nearshore trawl fisheries in the Middle Atlantic have generated some takes of sea turtles, particularly during summer, and the use of turtle excluder devices has been proposed.

Bycatch in Northeast commercial fisheries is monitored primarily through the Fishery Observer Program of the Northeast Fisheries Science Center. Several states also undertake some monitoring

activities in their waters. This program has operated since 1989. It is anticipated that approximately 5,500 sea days will be sampled in 2003 for monitoring of protected species and fishery discards. Discard data are also sought from fishermen in their mandatory logbook submissions. Preliminary information from this self-reporting program was correlated with observer estimates from identical trips. Although analyses suggest no obvious discrepancies, this may be due to the effect of the presence of the observer. Much more analysis of information and communication with fishermen is necessary before self-reported estimates of discards can routinely be incorporated into stock assessments.

3.6 Pacific Islands Region

The following summary was taken *verbatim* from the Western Pacific Fishery Management Council (2002):

Bottomfish fisheries occur throughout the Western Pacific region. The largest is in the Northwestern Hawaiian Islands (NWHI). Most of the bycatch in that fishery consists of three carangids (*Caranx ignobilis*, *Pseudocaranx dentex*, and *Seriola dumerili*) and sharks, all of which are discarded for economic reasons. The first two carangids and sharks have generally low market values and do not keep well. Most shark species require special on-board processing and storage to make their flesh marketable. The value of *S.dumerili* or kahala is very low because of its being implicated in ciguatera poisoning incidents. These species account for 80% to 90% by number of all bycatch in the fishery. It appears that no more than 25%, by number, of the catch in the NWHI bottomfish fishery is discarded. The mortality rate of discarded fish is highly variable among species. Although bottom-dwelling teleost fishes generally suffer high mortality from the decompression undergone while being brought to the surface, the carangid species that make up most of the bycatch in the NWHI bottomfish fishery are usually released alive and apparently viable.

Among protected species of sea turtles, marine mammals, and seabirds, only Hawaiian monk seals and Pacific bottlenose dolphins appear to have interactions with the NWHI bottomfish fishery, where they take fish from fishing lines. These species are rarely hooked and no fatal interactions have been documented. Seabirds have often been observed attempting to steal bait, but no hookings have been observed. Complete bycatch data are not yet available for the bottomfish fisheries in the Main Hawaiian Islands, American Samoa, Northern Mariana Islands, or Guam, but bycatch rates in those areas appear to be substantially less than in the purely commercial and distant-from-port NWHI bottomfish fishery.

An additional source of bycatch in the bottomfish fisheries is unobserved mortality, stemming from fish that escape from the hook and fish that are taken from the hook by predators. Research suggests that losses due to predation in the NWHI bottomfish fishery amount to perhaps 23-27 fish lost for every 100 fish boated.

Bycatch is assessed and reported in the bottomfish fisheries through logbook programs and creel surveys, many of which have undergone substantial improvements since the passage of the SFA. A vessel observer program in the NWHI has provided important information on bycatch and bycatch mortality, including interactions with protected species. Fishery-independent data sources, including experimental fishing projects in American Samoa and the Mariana Islands, have also provided bycatch-related data.

The Hawaii-based longline fishery is the largest pelagic fishery managed by the Council. The longline fishery in American Samoa has grown rapidly in the last three years with the entry of more and larger vessels. The largest component of the bycatch in the Hawaii-based longline fishery is sharks,

particularly blue shark. Sharks and other finfish species are discarded for economic reasons. According to vessel observer data, during 1994-2001, about 40%, by number, of the total catch in the Hawaii-based longline fishery was discarded. The percentage discard rate was about 13% for tunas, 15% for billfish, 63% for sharks, 32% for other Management Unit Species (MUS), and 97% for non-MUS.

In the past, many sharks were finned – that is, their fins were retained while their carcasses were returned to the sea. The finning rate peaked in 1999, when about 65% of all captured sharks were finned. The majority was blue sharks, representing 95% of all finned sharks. Two important regulatory changes in 2000 and 2001 substantially altered bycatch rates and bycatch mortality rates. State and federal prohibitions on shark finning had the effects of increasing the percent of blue shark that were discarded, decreasing blue shark absolute bycatch mortality rate (because blue sharks have relatively high post-hooking survival rates), and slightly increasing the retention rate of whole blue sharks. The 2000 closure of the swordfish-directed fishery also greatly decreased the catch of blue sharks and thereby decreased the fisheries overall bycatch rate. Vessel logbook indicate that in 2001, 96% of the approximately 45,000 sharks caught in the Hawaii-based longline fishery were discarded, 3% were retained whole, and 1% were discarded.

Interactions between the Hawaii-based longline fishery and sea turtles were significant enough that the fishery, as managed in 1999, was determined to jeopardize the continued existence of three sea turtle species, the loggerhead, the leatherback, and the green. Subsequent regulations – particularly the closure of the swordfish-directed fishery – have resulted in substantially lower interaction rates with sea turtles. The Hawaii-based longline fishery interacts with several species of seabirds. Most interactions are with the black-footed albatross and the Laysan albatross. Regulatory changes aimed at decreasing the incidental catch of sea turtles, as well as new seabird-related measures, have led to substantially lower interaction rates with the two albatross species, and probably have substantially reduced the likelihood of interactions with a third, endangered, species, the short-tailed albatross.

Reliable estimates of bycatch and bycatch mortality rates in the small-boat troll and handline fisheries of all the island areas are not yet available, but bycatch and bycatch mortality rates are believed to be relatively small because few species and sizes are unwanted and because when fish are discarded they are often in viable condition. An additional source of bycatch in the pelagic fisheries is unobserved mortality, but no estimates of likely mortality rates are available. Bycatch and protected species interactions are assessed and reported in the Hawaii-based longline fishery through a logbook program and a recently expanded vessel observer program. Bycatch in the American Samoa fishery is measured through creel surveys and a Federal logbook program, and will soon be further assessed through a vessel observer program. Bycatch in the other pelagic fisheries is monitored through local catch reports and creel surveys.

A variety of operational and management measures are used to minimize bycatch and bycatch mortality in the bottomfish and pelagics fisheries. In the bottomfish and troll and handline fisheries, the gear types and fishing strategies used tend to be relatively selective for desired species and sizes. Measures that serve to further reduce bycatch in the bottomfish fishery include prohibitions on the use of bottom trawls, bottom gillnets, explosives, and poisons. In the pelagic fisheries, a prohibition on the use of drift gillnets is aimed at reducing bycatch. New area closures and gear restrictions have been very successful in minimizing the bycatch of sharks, marlins and protected species interactions. Longline vessels are also required to employ specified mitigation measures to avoid catching sea turtles and seabirds and increase the likelihood of their survival after being released. An additional measure in the process of being developed that would further reduce bycatch and protected species interactions is restrictions on the use of bottom-set longline gear. Bycatch reduction is also achieved through non-

regulatory means, including outreach to fishermen and engagement of fishermen in research activities and the management process.

4. Alternative Methods for Monitoring Bycatch

Various methods are currently being used to monitor and estimate bycatch. Some of these methods may also be useful for developing bycatch reduction measures and for monitoring the effectiveness of such measures. The primary emphasis of this discussion will be on an evaluation of methods for monitoring bycatch levels in both commercial and recreational fisheries. Clearly, it is critical to have credible estimates of the type, rate, and level of bycatch currently occurring, as well as information on the fishing practices and other factors that may contribute to bycatch.

Several types of monitoring programs have been developed to estimate fisheries bycatch. These include the use of data collected aboard fisheries research vessels and chartered vessels, self-reporting by fishermen and/or other industry representatives, at-sea fisheries observers, video cameras, digital scanning devices, alternate platforms or remote monitoring, and stranding networks. The choice of which method to use for monitoring bycatch in a particular fishery is based on a number of factors including:

- Quality – in general, how precise and how accurate are the data that are collected?
- Completeness – does sampling cover the entire range of the fishery or fisheries that interact with the species of concern?
- Credibility – how well do the data stand up to scrutiny by affected stakeholders and other constituents?
- Cost – what are the relative expenses associated with the sampling method, and are there economies of scale that can be realized?
- Timeliness – how quickly are the data available to fisheries scientists and managers?
- Safety – how safe is the methodology compared to other monitoring methods, and what safeguards are in place to ensure the safety of the data collectors?
- Logistics – how easily is the monitoring program implemented and maintained?

Alternatives for monitoring and estimating bycatch will be discussed in the context of these factors.

4.1 Fishery-Independent Surveys

It is possible to use fishery-independent surveys to estimate bycatch from a fishery. This is done by multiplying the effort that occurs in the fishery (by relevant strata) times the rate of bycatch that is observed in fishery-independent surveys. The suitability of this approach depends on how closely the fishery-independent observation methods (gear, etc.) mimic that of the fishery. In order to discuss this more fully, one should understand the usual role of fishery-independent surveys within NMFS' research programs.

NMFS conducts a variety of surveys during specific seasons in both offshore and inshore waters, using both NOAA and chartered survey platforms. Surveys are conducted according to a schedule that varies according to the species sampled, the availability of survey platforms, and weather conditions (see NRC 2000, p.68, for a summary of NMFS Research and Charter Vessel Surveys). By definition, fishery-independent data are collected independently of fishing activities, and include

information on the distribution, abundance, and biology of the species being assessed. These data are collected using standardized sampling gear (e.g., trawls, hooks, or pots), with multiple samples taken, distributed over the range of the stock (NMFS 2001).

The usual objective of fishery-independent research surveys is to provide information to characterize various species of concern, specifically year-to-year variation in abundance for these species. Other secondary goals may include such things as spatial and temporal distribution patterns, size and age composition, fecundity measurements, and environmental monitoring. With any survey cruise, simultaneous abundance levels and life history information for as many species as possible are gathered. In some cases, these may include species of concern for bycatch monitoring.

To determine the abundance of the various species, the measurement or index of interest taken during the survey is catch-per-unit-of-effort (CPUE). This value can be measured in either weight or number. The CPUE value is a product of two terms, the actual abundance of the species (N) and the catchability coefficient (q) related by CPUE = qN. The catchability coefficient represents the fraction of the stock removed per unit of effort. It is desirable that this coefficient exists as a constant, but many external factors can have pronounced effects on the catchability coefficient for a particular species. These factors include the type of gear, bottom topography, species distribution, species size. The goal of this kind of research survey is to monitor the stock in a consistent manner such that the catchability coefficient is not systematically biased. In so doing, the CPUE derived from the survey is a measure of relative abundance of the stock.

There are five basic principles that any research survey cruise must adhere to if the research goals are to be achieved. Each of these principles is required for the species of interest:

- The cruise should be synoptic in that it provides a snapshot in time (temporal component). Both fishing and natural mortality rates are an important consideration with this factor. If synoptic stock-wide surveys are not possible, assessment models may be used to estimate populations from partial surveys;

- The survey should be stock-wide in area (spatial component). If only a fraction of the stock is sampled, calculated abundance levels can be misleading in assessments;

- The sampling design should be well defined in order to obtain a representative sample of the stock; the usual way is with some type of random or stratified random statistical design;

- The survey design should produce some level of useful precision with regards to the abundance estimate. Both the number of observations and the quantity of catch are important for this parameter. For each sample there must be enough of each species of interest, but not so much as to overwhelm the effort and cause complex sub-sampling efforts. Many bycatch species of interest may be comparatively rare in the sample. However, in most cases, the system is forgiving with this principle, and even low precision estimates can be, and are often, useful in assessment efforts; and

- The survey should control bias. It is important to keep all controllable factors as constant as possible, doing the survey in the same way, with the same gear.

In any regional research effort both fishery-independent and fishery-dependent data are necessary for accurate assessment of the various fishery stocks and to address any potential bycatch-related problems. Resource survey trips are used to sample the stock. On the other hand, fishery-

dependent (e.g., observers on commercial vessels) trips have the potential for much higher sampling effort. An increase in effort usually produces a higher level of precision, but it is possible that these fishery data are not representative of the stock. Basically, when both types of data are available, fishery-dependent data are mostly used to characterize the catch, while fishery-independent data is intended to characterize the stock.

When using fishery-independent information, consideration must be given to the following:

- Surveys do not always use commercial gear, and when commercial gear *is* used, it is often just one of a suite of gears that are being employed. Research gear is generally smaller and may be of a different configuration than gear generally used by commercial vessels;

- Surveys use a different fishing strategy than commercial fishing vessels. Whereas commercial fishermen generally strive to maximize their economic returns (e.g. catch efficiency catches or minimization of bycatch), survey cruises set gear at predetermined sampling strata, which are sampled year after year;

- Surveys do not generally set gear for the same amount of time as commercial vessels, and rarely have tow durations of more than half an hour;

- Surveys are generally limited to certain seasons, whereas commercial fishing may occur year-round; and

- Surveys may be limited to daytime sets, whereas commercial fishing may occur around the clock.

A resource survey program using otter trawl gear to sample shrimp resources has existed in the northern and western offshore waters of the Gulf of Mexico since about 1972. The survey collects CPUE data on all species collected with this gear. Data are collected using a stratified random sampling design. Data from these fishery-independent surveys has been used with some success to estimate bycatch levels of 13 species in the Gulf of Mexico shrimp fishery for years in which there was no observer coverage. Directly observed commercial finfish CPUE data from three observer programs in the 1980s (Turtle Excluder Device evaluations, turtle incidental catch project, and shrimp bycatch project) and one in the 1990s (shrimp bycatch program) provide good estimates of CPUE for various species during the periods of collection.

While directed observer observations are discontinuous in space and time, resource survey cruises provided a common thread that could link the disconnected data from the observer projects. A Generalized Linear Modeling (GLM) approach was used to estimate what shrimp vessel catch rates would have been in different years, areas, and seasons, had direct observations been made throughout. While this approach has been used to initially estimate bycatch levels in the Southeast shrimp trawl commercial fleet when no direct observations were made, it needs to be recognized that the data would only support broad breakdowns in time and space categories.

Estimation of the discard component of bycatch using information derived from fishery-independent surveys has also been employed in the Northeast region for selected species (Mayo et al.

1981, 1992). The technique essentially applies a filter derived from a selection ogive[3] to the size composition observed in research vessel surveys in concert with information derived from the commercial fishery. This method is currently employed to develop bycatch estimates for two stocks: witch flounder and American plaice (Mayo et al. 1992).

In this example discard rates are based on catch, effort and length frequency data collected and recorded by the NEFSC Domestic Sea Sampling Program. Sea sample discard rates are expanded to total discards based on effort data collected and recorded in the NEFSC interview and weighout system, and on indices as determined by NEFSC spring and autumn bottom trawl surveys.

The credibility of bycatch estimates based in part on fishery-independent data will tend to be greater when the fishing operations that occur during the survey cruises and commercial fishing are similar.

4.1.1 Costs of Estimating Bycatch from Fishery-Independent Surveys

Although collecting fishery-independent data is expensive (up to $10,000 per day vessel operating costs), the primary objective of surveys is to provide information on abundance trends for stock assessments, and not bycatch estimates. Therefore, the additional cost of estimating bycatch from survey cruise data is relatively low, but may involve additional sampling of species considered to be bycatch.

4.1.2 Safety Aboard Fishery-Independent Surveys

Safety concerns are an issue any time data collection programs operate at-sea. These concerns exist aboard both NOAA vessels and chartered research vessels. NOAA vessels are overseen by NOAA's Office of Marine and Aviation Operations, and NOAA vessels must comply with minimal safety requirements and must conduct periodic safety drills (see http://www.moc.noaa.gov/all_ships/policy.htm for a discussion of shipboard policies with respect to safety). Although NOAA vessels are considered public vessels and are therefore exempt from regulatory oversight by the United States Coast Guard (USCG), NOAA requires that all of its vessels and small boats comply with or exceed all applicable regulatory and industrial standards. For scientists aboard non-NOAA vessels (such as chartered fishing vessels), NOAA requires that program managers assess the seaworthiness of vessels, the experience of the vessel operator and crew, and its capabilities for communications and emergency response. However, the additional safety concerns associated with collecting bycatch data on surveys are probably minimal.

4.1.3 Summary of Fishery-Independent Surveys

Inferences can be made from research surveys regarding what commercial catches might be, if there are ratio estimators that can be used to convert fishery-dependent bycatch rates to commercial

[3] An ogive is a curve relating the cumulative probability of an event (e.g. being retained by a type of fishing gear) as a function of an explanatory variable (e.g. the size of the individual).

catches. Fishery-independent surveys may be useful in estimating total bycatch for fisheries in which observer data are discontinuous and where fishery-dependent CPUE estimates are available. However, these models are best applied to complement direct observations of fishing effort from a full-fledged observation program or as a beginning point for developing more mature observation programs. Nevertheless, fishery-independent estimates of bycatch will always be subject to criticism that the characteristics of the research effort are different from those of the fishery and that those differences are not adequately incorporated into the estimation.

4.2 Fishery-Dependent Self-Reporting

Fishery dependent data are data collected from commercial and recreational fishing activities, thereby providing information on removals associated with actual fishing operations. Self-reporting by fishermen, via logbooks, or by dealers, via sales receipts of trip tickets, can provide an indication of bycatch if these data are required to be submitted along with information on the target catch and if there is adequate compliance with such requirements. Self-reporting programs provide trip-based fishery catch and sometimes effort information on a fishery-wide basis to fishery managers. Dealer reporting is one type of self-reporting in which dealers are required to report the amounts of fish bought and sold, by vessel and by species. Dealer reporting is required by nearly all state resource agencies, but does not generally include reporting of bycatch. One exception to this is the Alaska Department of Fish and Game's requirement that all discards be reported.

4.2.1 Logbooks

Mandatory reporting requirements for logbooks are a type of self-reporting and are generally more detailed, and may include information on type of gear used, date, time of day, and position of fishing activity, weather conditions, fishing characteristics of the deployment of the gear (e.g., tow length, number of hooks set), and catch of non-target species. Logbooks can be useful in estimating bycatch, but only if fishermen are required to report bycatch in the logbooks, and this requirement is enforced. However, many logbook programs do not require the reporting of bycatch, or do not place a strong emphasis on accurate reporting of bycatch (Table 1).

The Marine Mammal Protection Act's Marine Mammal Authorization Program has as its primary focus the self-reporting of marine mammal bycatch. The Marine Mammal Authorization Program requires that any fishermen participating in a state or federal fishery that operates in U.S. waters report all injuries and mortalities of marine mammals associated with fishing operations to NMFS within 48 hours of returning to port. This requirement was enacted by the 1994 Amendments to the MMPA, and replaced a marine mammal logbook reporting requirement that had been in place for all Category I and II fisheries since 1989 (the Marine Mammal Exemption Program). However, the Program has not succeeded in obtaining reliable marine mammal bycatch data. Despite fairly good outreach and distribution of reporting forms to all state and Federally-permitted fishermen each year, compliance with the reporting requirement is thought to be very low (Lawson, Patricia, NMFS Office of Protected Resources, pers. comm.). Compliance with the previous Marine Mammal Exemption Program logbook requirement varied from fishery to fishery, but overall was also very low (Credle, 1993).

Logbook information can provide important adjunct data for use in stock assessments. However, the raw CPUE derived from such data may not accurately reflect fish abundance (Ianelli et al., 1994; Methot et al., 1994; Turnock et al., 1994). Thus, usually the data are statistically standardized before being used in an assessment. Fox and Starr (1996) note that although catch information from logbooks can augment research data and improve estimates of the distribution and

relative abundance of commercial fish species, the discard of fishes provides a potentially major discrepancy between logbook and research estimates of fish abundance. They note that for logbooks to be useful for bycatch monitoring, cooperation from the majority of fishermen is critical.

Table 1. Federally managed fisheries with mandatory logbook requirements, and bycatch reporting requirements.

Region	Fishery/FMP (Gear Type(s))	Species of Bycatch Required to be Reported
Southwest	Coastal Pelagics – Sardine, Anchovy, Mackerel, Squid (Purse Seine, Lampara Net, Drum Net)[1]	None
	[Proposed] Highly Migratory Species – Swordfish, Tuna, Sharks (Purse seine, longline, troll/baitboat, drift	All discards, including protected species
	Albacore (Troll)	None
Southeast	Pelagic Highly Migratory Species – Swordfish/Tuna/Shark (Longline, Hand Line, Harpoon,	All discards, including protected species
	Snapper/Grouper/Wreckfish (Bottom Longline, Trap)	All discards, including protected species
	Coastal Migratory Pelagics – Mackerel, Dolphin and Cobia (Gillnet, Handline, Troll Line)	All discards, including protected species
	Reef Fish (Bottom Longline, Trap)	All discards, including protected
	Golden Crab (Trap/Pot)	All discards, including protected
	Coastal Sharks (Bottom Longline)	All discards, including protected
	Headboat/Charterboat (Rod and Reel)	None
Northwest	West Coast Groundfish (Limited EntryTrawl)[1]	All Fish
	Pacific At-Sea Whiting (Trawl)[2]	All Fish
	Recreational Salmon and Groundfish Charterboat/Party	All Fish
Alaska	Bering Sea/Aleutian Islands Groundfish for vessels > 60' (Trawl, Longline, Pot, Jig)	All Fish
	Gulf of Alaska Groundfish for vessels > 60' (Trawl,	All Fish
	Pacific Halibut (Longline)	None
Northeast	Groundfish Multispecies, (Trawl, Gillnet)	All discards, including protected species
	Scallop (Dredge, Trawl)	All discards, including protected species
	Monkfish (Trawl, Gillnet)	All discards, including protected species
	Summer Flounder (Trawl)	All discards, including protected species
	Scup,black sea bass (Trawl and Pot)	All discards, including protected species
	Tilefish (Bottom Longline)	All discards, including protected species
	Bluefish (Gillnet)	All discards, including protected species
	Herring (Seine and Midwater Trawl	All discards, including protected species
	Spiny Dogfish (Gillnet)	All discards, including protected species
	Red Crab (Pot)	All discards, including protected species
	Squid, Mackerel, and Butterfish (Trawl)	All discards, including protected species
Pacific Islands	Western Pacific Pelagics – Swordfish, tuna, shark (Longline)	All discards, including protected species
	Precious Corals (direct collection)	None
	Crustaceans (Traps)	All fish
	Bottomfish (hook and line, bottom longline)	All fish

[1] Reporting requirements outlined in state (not Federal) regulations. [2] Voluntary reporting.

4.2.1.1 Accuracy of Logbooks

Inaccuracies of logbooks primarily result from misreporting of species that are of little economic interest (particularly of bycatch species) and low compliance rates. If fishermen perceive that accurate reporting of bycatch will result in restricted fishing effort or access, they have an incentive to under report or not report.

The system used in the Northeast to determine both landings and self-reported discards is typical and is presented here in some detail. Fishery statistics were collected in the Northeast under a voluntary reporting system prior to 1994. Landings and price data were collected by NMFS port agents and state personnel at the point of first sale through dealer reports or "weigh-out receipts". This information was complemented by interviews of vessel captains by NMFS port agents at dockside, to collect detailed data on fishing effort, gear used and areas fished; and a monthly canvas to collect landings data at secondary ports.

In June of 1994, voluntary reporting was replaced by a mandatory reporting system in which dealer reports were retained, and dockside interviews were replaced by a logbook reporting system. The dealer reports contain total landings by market category. The Vessel Trip Report (VTR) data contain information on area fished, kept and discarded species (in pounds), gear type (gear size, gear quantity, mesh size), and effort (number of hauls, haul duration and crew size). These data are from logbooks from charter, party and commercial trips, as well as logbooks that document that no fishing took place during a given month. Essential data elements such as location fished, gear used and amount of fishing effort, previously annotated by port agents through interviews, do not now exist in the dealer reports and must be extracted from corresponding vessel trip reports (VTRs). Dealer reports are assumed to provide accurate totals for landings and revenue; VTRs are the source of a subset of the dealer data.

This system is now used in all Northeast fisheries subject to federal fishery management plans or FMPs, except the American lobster and highly migratory species fisheries. However, many vessels that fish for lobster and herring are permitted under one or more of the remaining federal FMPs, and are therefore subject to mandatory reporting. The transition to the mandatory reporting system based on logbooks has resulted in concerns about data quality and reliability (NEFSC 1996), and the use of VTR data for discard estimation must be carefully evaluated on a case-by-case basis. Further inter-comparison of discard estimates derived from the self-reporting system and other sources such as the Northeast observer program is essential. The observer coverage rates have increased over the last two years, making further calibration of different systems for by-catch estimation more reliable. If the self-reported data can be verified, the broad fishery coverage possible will substantially enhance estimation of bycatch. In the Northeast a comparison of observer and logbook estimates of cod discards showed consistency in two of the three years that were examined.

The accuracy of self-reporting can be inferred from comparisons of discard information derived from logbooks or vessel trip report system and observers (either on the same trips or operating in similar areas). Logbook data submitted by Hawaii longline fishermen was compared to data gathered by longline observers (Walsh 2000). The study tested the assumption that the accuracy of logbooks in reporting species of major commercial importance (swordfish, bigeye tuna, and yellowfin tuna), would be greater than the reporting of species of lesser importance (spearfish and skipjack tuna), or species caught in great numbers (blue shark and mahimahi). The study also examined the accuracy of fish identifications on sets with protected species interactions, and compared reported fish catches to records from the same vessels that had sold their fish to a public fish auction (more on the results of the

accuracy of observer reports in the next Section on observers). Sets with observed interactions with protected species were of particular interest, as observers were instructed to give these sets the highest priority, and this may have introduced a bias with observers with respect to reporting catches of other species. The study found biases due to under reporting in logbooks, taxonomic errors by both novice observers and fishermen, difficulties by both groups in counting abundantly caught species, and incorrect use of logbooks (e.g., recording data in the wrong area of the logbook). The study also determined that the most common errors in logbooks were under reporting of catches and "rounding" of values reported for abundantly caught species catch. From this study, one could infer that logbooks may not be reliable for estimating bycatch of abundantly caught species or species of lesser economic value.

Further work evaluated the usefulness of logbooks to characterize fish catches for the unobserved segment of the longline fleet (Walsh et al., 2002), specifically blue sharks, a retained incidental catch in this fishery. This study reiterated the tendency of logbooks to under report catches as compared to observer reports, but also revealed several cases of over reporting of blue shark catches in logbooks. However, data from logbooks in conjunction with observer data allowed the authors to model catches of blue sharks for the unobserved portion of the fleet, using a Generalized Additive Model (GAM). The authors also noted that reporting accuracy improved after the deployment of observers, presumably due to increased awareness among fishermen of their reporting requirement.

The advantage of logbooks as compared to other sampling methods is that logbooks are usually required of all fishery participants, and therefore represent a near-census of the fishery. There are few other reliable methods for estimating effort fleet-wide effort by time and area. Reliable measures of effort are critical when using observed bycatch per unit effort to estimate bycatch for fishery as a whole. However, if there is less than complete compliance with the logbook requirement, or reporting significantly misrepresents actual fishing effort, extrapolated bycatch estimates may be inaccurate.

4.2.1.2 Costs Associated with Logbook Programs

The costs of logbook programs to the agency are typically less than the costs of observer programs, if compared on a per sea day basis. The costs to the agency include producing and distributing the logbooks, data entry, database maintenance, and analytical costs. As with fishery surveys, logbooks are generally not implemented solely to collect information on bycatch. Therefore, the cost of collecting bycatch data via logbooks is marginal, and may be limited to costs associated with the entry and analysis of the bycatch data.

4.2.1.3 Safety and Logistics of Logbooks

Concerns regarding safety are limited to concerns that already exist with fishing operations, which are substantial for fishermen but basically nonexistent for those processing logbooks.

Logistics associated with logbook programs considered here include the timeliness of submittal of the data to the government, the time required for data entry, and promising advances in the use of technology for more timely reporting of logbook data.

Timeliness of data varies with the fishery. Requirements may range from weekly to annually. Timeliness and overall compliance with the reporting requirement can be improved if the issuance of permits is contingent on the submittal of logbooks (this system is only applicable where permits are required). In some cases, port agents or other agency employees or contractors collect logbooks dockside, which also increases timeliness and compliance.

Data entry can be time-consuming, and can delay accessibility to the data. A rigorous quality control program must be integrated into data entry, with at least 5-10% of logbooks double entered and safeguards in the software to minimize transcription errors (such as the use of dropdown pick lists, and verification of entries that fall outside preestablished ranges).

Recent advances in technology have automated the collection and entry of self-reported fisheries data in some fisheries, and these advances hold the promise of more timely estimates of effort for use in bycatch estimation on a real-time or in-season basis. They can also be a source of reliable information when spatial and temporal information is conveyed automatically for each set, e.g., for those systems that have built-in GPS and time/date stamp units. Electronic logbooks can also reduce the frequency of transcription errors, but they may introduce other errors. Proper training of fishermen in data entry is critical but can be less rigorous for well-designed programs. Secure data transfer systems are also critical.

4.2.1.4 Logbook Program Summary

Logbooks may provide qualitative estimates in bycatch where bycatch is required to be reported; however, the accuracy of these data is of concern. Logbooks are more useful in providing estimates of total effort by area and season that can then be combined with observer data to estimate total bycatch. Safety concerns associated with logbook programs are minimal, as compared to at-sea data collection programs. Logistics associated with processing the data collected have limited its usefulness, but may be aided by recent technology advancements designed to increase the speed at which data are transferred while also improving the quality of data submitted.

4.2.2 Port Sampling

Port samplers are Federal or state government-employed or contracted biologists trained to collect fishery information and biological samples from fishermen and/or dealers, at or near the time of landing. In some cases, the presence of a port sampler is required to offload fish (the port sampler is making direct observations of what is landed); in other cases, a random sampling strategy is employed, while taking advantage of opportunistic sampling where possible.

Port samplers collect information primarily on catch, but also bycatch when available. Bycatch data collected by port samplers are similar to logbook data in that there are significant concerns about the completeness and accuracy of these reports. Data from interviews with fishermen or dealers may not be representative of total catch, as they depend on the willingness of these individuals to report catches accurately. Biological sampling is limited to only the landed catch, and does not include sampling of any discarded species. In addition, port sampling typically results in only a small sample of total fishing effort, and port samplers are not consistently used in all U.S. ports. An advantage over logbooks, though, is the timeliness of these reports and their usefulness in directing further sampling towards potential problem areas.

4.2.3 Recreational Sampling

In most coastal states, recreational data have been collected under the annual Marine Recreational Fisheries Statistics Survey (MRFSS) since 1979. The objective of this survey is to provide estimates of recreational catch and effort over fairly large strata (by state and two-month wave). In 1997, nearly 17 million anglers made 68 million marine fishing trips to the Atlantic, Gulf, and Pacific coasts. The estimated marine recreational finfish catch was 366 million fish, and more than 50% of fish caught were released alive.

The MRFSS data is collected by two independent, but complementary, surveys: 1) a telephone survey of households in coastal counties, and 2) an intercept (i.e., interview) survey of anglers at fishing access sites. The telephone survey is used to collect reliable data on recreational fishing effort. Information on the actual catch (and bycatch), such as species identity, number, and both weights and lengths of fish are collected via the intercept survey. The intercept survey is analogous to port sampling for the commercial sector with similar advantages and disadvantages. Estimates of bycatch by recreational fishermen are made based upon self-reporting during the intercept. However, as these fish are discarded at sea, they are not observed by the interviewer and, thus, information on bycatch is less reliable (Van Voorhees, David, NMFS Office of Science and Technology, pers. comm.).

In an effort to increase the quality of data on both catch and bycatch, NMFS also operates an at-sea component of the intercept survey on the for-hire (charter and party/headboat) fleet. This sampling is currently focused on vessels operating in the Atlantic, but will soon be expanded to the Gulf of Mexico. Additionally, pilot surveys have been established to examine statistical techniques using a "panel of experts" or "focus group", i.e., charter operators who are both reliable and heavily active in the fishery. The technique monitors the fishing activities of the panel leading to estimates of catch and effort (after adjusting for non-panel member activity using normal survey data). The goal of this technique is to obtain more efficient estimates, particularly of effort. If successful, this would improve precision of discard estimates, as well.

4.3 At-Sea Observation

4.3.1 At-Sea Observers

Fisheries observers are biologists trained to collect information onboard fishing vessels. Observers may be deployed for various reasons, including monitoring of protected species interactions and monitoring of total removals (including discarded species). Observers may also be used to monitor compliance with fishery regulations or other environmental laws, to validate or adjust self-reported data, to provide vessel-by-vessel catch, for in-season quota management, or to monitor experimental or exempted fishing activities.

Regardless of the primary objective for placing observers in a fishery, at-sea observers are generally trained to collect information on the catch and bycatch, as well as information on the disposition (i.e., released alive vs. dead) of some or all of the bycatch species. Observers routinely collect biological samples and also may assist with fisheries research or tagging studies. Besides data on catch and bycatch, observers may also collect information on gear used, vessel type and power, fishing techniques, fishing effort, gear characteristics, environmental conditions, and, in certain fisheries, economic information (crew size and crew shares, fuel, bait, and ice usage, and other expendables, such as light sticks).

The wide range of information collected by observers is useful for life history analyses, for determining gear selectivity and fishing efficiency over time, and for studying the behavior of fish and fishermen. Observer data can also be used in combination with information collected from fishery-independent sources, port observations, and landings receipts to estimate the relative abundance of target and bycatch species in some fisheries.

NMFS' authority to place observers on certain fishing vessels comes from the Magnuson-Stevens Fishery Conservation and Management Act (MSA), the Marine Mammal Protection Act (MMPA), and the Endangered Species Act (ESA), as well as other marine laws. Table 2 summarizes fisheries that, in 2003, had some level of mandatory or voluntary observer coverage under Federally managed observer programs.

Table 2. Fisheries under Federal jurisdiction with observer coverage (2003), authority to place observers [Magnuson-Stevens Act (MSA), Marine Mammal Protection Act (MMPA) Category I or II (as designated in the 2003 List of Fisheries), or voluntary], and program duration.

Region	Fisheries	Authority to place observers	Program duration
Southwest	California/Oregon Pelagic Drift Gillnet	MMPA Cat. II	1990 to present
	California Set Gillnet	MMPA Cat. I	Reinitiated in 2003
	California Pelagic Longline	MMPA Cat. II	2002 to present
Southeast	Southeastern Shrimp Otter Trawl (including rock shrimp and calico scallop)	Voluntary	1992 to present
	Southeast Directed Shark Gillnet	MMPA Cat. II, MSA	1998 to present
	Atlantic Pelagic Longline	MMPA Cat. I, MSA	1992 to present
	Southeast Directed Large Coastal Shark Bottom Longline	MSA	1994 to present
Northwest	West Coast (CA/OR/WA) Groundfish Trawl and Non-Trawl Gear	MSA	2001 to present
	Pacific At-Sea Whiting Trawl	Voluntary	1975 to present
Alaska	Bering Sea/Aleutian Islands and Gulf of Alaska Groundfish Trawl, Longline and Pot Fisheries	MSA	1973 to present
	Alaska Inshore Salmon Gillnet and Purse Seine Fisheries – (Kodiak Setnet planned for FY04)	MMPA Cat. II	1999 to present
Northeast	New England Groundfish Trawl and Fixed Gear (including gillnet) Fisheries	MMPA Cat. I (gillnet only), MSA	1990 to present
	Mid-Atlantic Coastal Gillnet (includes monkfish, dogfish, and several state fisheries)	MMPA Cat. I	1994 to present
	Mid-Atlantic Small Mesh Trawl (Squid, Mackerel, Butterfish)	MMPA Cat. I, MSA	2001 was first year of dedicated funding
	Atlantic Large Mesh Trawl (summer flounder, bluefish, monkfish, dogfish)	MSA	1998 to present
	Atlantic Sea Scallop Dredge - Closed Areas Exempted Fishery	MSA	1999 to present
	Atlantic Sea Scallop Dredge - Open Areas	MSA	1994 to present
Pacific Islands	Hawaii Pelagic Longline	MSA	1994 to present

4.3.1.1 Estimating Bycatch

The impetus for implementing an observer program is generally based on concerns over the bycatch of one or more species. In an ideal world, 100% observer coverage of all fishing effort and catch would provide fishery managers with very accurate measures of bycatch. More commonly, however, funding limitations, safety considerations and/or logistical constraints usually constrain sampling to some smaller portion of total effort. The reliability of bycatch estimates is then gauged by such factors as precision, as well as representativeness of samples and observer effect.

Bycatch mortality can be estimated using standard approaches in which catch rate per unit effort is multiplied by total effort within a stratum and the proportion of individuals that die (Hall 1999). Fishing effort can be determined from observer data in fisheries where observers are monitoring all fishing activity (i.e., 100% coverage of all fishing effort). For fisheries with less than 100% coverage, fishing effort is generally derived from self-reporting, such as logbooks, port sampling, or landing receipts. Alternatively, total bycatch can be estimated using estimates of bycatch rates (i.e., discarded catch per total catch) for observed vessels and an estimated total landed catch (by strata) for a fishery. The proportion of individuals caught that die can be determined from tagging of released animals and tracking of these animals, post-release. This is often referred to as "latent mortality." For example, the mortality rates of discarded Pacific halibut vary between 16-100% depending on gear type (Williams et al. 1989) and method of release (Hoag 1975). The reliability of the bycatch mortality estimate must then also take into account the reliability of the effort estimate and the reliability of the latent mortality estimate.

4.3.1.2 Precision of Bycatch Estimates

The desired precision of a bycatch estimate is related to the cost and sampling rate of an observer program. This subject will be addressed in some detail in Section 5. The measure of precision commonly used in reference to observer programs is the coefficient of variation, or CV, associated with the estimate of bycatch (the lower the CV, the greater the level of precision). However, at some level of sampling, only incremental decreases in CV may be obtainable despite large increases in sampling (as illustrated in Figure 1). Therefore, managers seek to achieve a level of sampling that has an acceptable balance between precision (CV) and cost.

Gabriel and Fogarty (in press) calculated first-order estimates of relative precision for discard rates of key species in the Northeast groundfish fishery, based on observed bycatch rates at a trip level, stratified by quarter. The relative precision is determined by scaling the standard error of the discard estimates and dividing by the discard level. The relative precision of discarded catch estimates (by stock) ranged from 0.13 for American plaice, to 1.56 for the Gulf of Maine-Georges Bank windowpane flounder, illustrating the difficulty in designing a sampling program that generates precise estimates for all species caught. For the flounder example, the use of combined strata substantially improved the precision of the estimate. Sampling designs and precision goals are examined in Section 5.

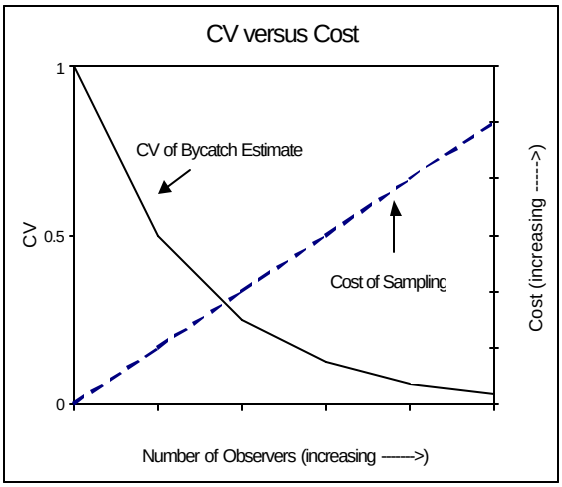

Figure 1. Trade-offs between precision (CV) and cost.

4.3.1.3 Accuracy and Bias in Observer Programs

Observer programs strive to achieve samples that are representative of both fishing effort and catches. Representativeness of the sample is critical not only for obtaining accurate estimates of bycatch, but also for collecting information about factors that may be important for mitigating bycatch. Bias may be introduced at several levels: when vessels are selected for coverage, when hauls are selected for sampling, or when only a portion of the haul can be sampled. Biases in sampling may also be introduced just by having an observer onboard the vessel.

Vessel selection strategies vary from fishery to fishery, depending on how the fishery is prosecuted, the nature of the observer program (voluntary vs. mandatory coverage), the distribution of fishing vessels, and safety and accommodation concerns. In the West Coast Groundfish fishery, vessels are selected for coverage for an entire two-month cumulative trip limit (NWFSC 2003). This selection strategy minimizes bias associated with estimation of discards, as the tendency to discard certain species that are managed by trip limit quotas may increase as the trip limit period draws to an end (Cusick and Methot, pers. comm.). Voluntary programs may be designed to achieve a representative sample, but may be subject to bias if there are refusals by selected vessels. The fishing effort associated with vessels fishing out of one or a few major ports may be easier to track to ensure randomization of observer coverage than vessels fishing out of many smaller ports. Concerns regarding safety or accommodations may limit the pool of sampled vessels and affect the agency's ability to achieve a random sample. Therefore, vessel selection strategies must be representative of actual fishing effort, in terms of time (i.e., over the entire fishing season) and space (i.e., over the full geographic range of the fishery), as well as vessel type, gear type and targeting strategy.

Once the vessel has been selected for coverage, either all hauls are sampled, or a portion of the hauls are sampled. For fisheries that operate around the clock, where only a portion of the hauls can be sampled, methodologies must be used that randomize which hauls are chosen for sampling. The North Pacific Groundfish Observer Program uses a combination of Random Sampling Tables and Random Break Tables to assist observers in determining which hauls should be sampled to ensure randomness (AFSC 2003).

In certain fisheries, such as trawl and purse seine fisheries, observers may only be able to sample a portion of the entire catch. Sampling methodologies have been developed in the North Pacific Groundfish trawl fishery to ensure a random sample of the catch is taken, and observers are also encouraged to maximize their sample size to minimize bias. However, they are also cautioned to be aware of sources of bias such as mechanical interferences that affect how fish flow to the point where they are sampled, or deliberate interference and intentional pre-sorting of the catch, and steps that should be taken to avoid and/or document these biases (AFSC 2003). Sampling of the catch can also be biased in gillnet or longline fisheries, if an observer is unable to see the net or line as it comes out of the water, due to where the observer is physically located on the vessel or due to weather conditions that may limit visibility. In these instances, animals may be caught but released before being brought on board, without the observer's knowledge or before the observer is able to make a positive species identification. Interference with observer sampling by the crew or intimidation of the observer may also be a source of bias in certain programs, but one that is quickly brought to the attention of observer program managers and enforcement officials. How well observer sampling efforts represent actual fishing behavior can be difficult to determine, especially in new programs or programs with low levels of coverage, where knowledge is limited regarding the unobserved portion of the fleet.

Another source of bias is known as the "observer effect." Observer effect is the change in fishing behavior caused by having an observer onboard a vessel. This can result in avoidance of known

"hot spots," reduced fishing effort, extra attention paid to the quick release of live animals, or efforts by fishermen to prevent observers from making accurate bycatch estimates for observed sets. Observer effects can be difficult to measure and account for. Although increases in observer coverage may increase the accuracy of bycatch estimates by decreasing the chances that observed operations are not representative of all operations, this is not recommended without first attempting to quantify this effect through some other, independent assessment of fishing activity. This could include analysis of data from logbooks, landings reports, Vessel Monitoring Systems (VMS), or electronic monitoring programs. In some cases, a compliance program will be needed to decrease some of the bias introduced by the observer effect.

Determining the accuracy of observer data can be difficult unless there are methods for validating these data. Walsh et al. (2002) evaluated data collected by observers in the Hawaii longline fishery against auction house data and found that overall, occurrences of errors were low, and errors in the misidentification of pelagic species or the enumeration of abundantly caught fish were more likely to occur due to inexperience in either the job or the fishery, or the poor performance of a single individual. He concluded that the relatively small number of errors in the Hawaii observer data set increased the usefulness of these data in verifying the accuracy of logbook data.

Where bias cannot be eliminated through adherence to strict sampling protocols, it must be accounted for by measuring the extent of the bias and incorporating this into analysis of the data.

4.3.1.4 Cost and Logistics in Observer Programs

Observer programs can be one of the most expensive monitoring methods available for estimating bycatch. Direct expenses include the cost of recruiting and training observers, salaries and benefits (including premium pay while at sea and on-call pay while waiting for a vessel to depart), contractor profit, travel costs, gear and equipment, and insurance (which can be up to 30% of the cost of a sea day). Some programs also provide a food allowance to the observer or the vessel while the observer is deployed at sea ($20-25/day). The Southeast shrimp trawl observer program pays $150/day to fishermen for time and shrimp lost due to testing of gear. Indirect expenses include the salaries and benefits of NMFS employees that oversee the largely-contracted workforce, sampling design and data analytical support, data entry, and database design and maintenance. Currently, direct expenses may range from $350 - $2000 per sea day. Increased costs are associated with observation of seasonal fisheries, fisheries operating in remote areas, low effort fisheries that require 100% coverage, fisheries with unpredictable levels of effort, and fisheries that have fishermen embarking unpredictably out of any number of ports.

Because observer programs are expensive, their use has been limited to date to fisheries with known or suspected high levels of bycatch. This creates gaps in knowledge where interactions may be occurring but are not being documented. Inconsistencies in funding from year to year can also affect sampling effort over time, creating disparate data sets, and introducing additional sources of bias.

Currently, the majority of NMFS observer programs are government funded. Notable exceptions include the North Pacific Groundfish Observer Program, the At-Sea Pacific whiting fishery, and the Atlantic scallop fishery operating in closed areas. Consideration should be given to how much NMFS should pay and how much specific fleets should pay (in the form of fees or payments), and whether fisheries should be provided with incentives for having vessels pay, as in the case of the closed area scallop fishery, where vessels that participate in the fishery are able to offset observer costs by having access to otherwise closed areas and increased harvest allowances.

The logistics associated with implementing observer programs and deploying observers can be substantial. Considerations include procurement of observer services, observer training, moving observers around, minimizing down time, and deployment of observers in highly mobile fisheries or fisheries operating out of many ports. Experience in deployment of observers can minimize logistical difficulties. NMFS has effectively implemented observer programs in each region of the U.S. The National Observer Program in the NMFS Office of Science and Technology provides a forum for sharing experiences and addressing logistical as well as policy issues to increase the efficiency and effectiveness of observer programs nationwide.

Realizing the potential for timely access to observer data can increase the benefits of an observer program relative to other data collection methods. Real-time access by fishermen to observer data in the North Pacific groundfish fishery has resulted in reduced bycatch of halibut and, consequently, longer fishing seasons; and real-time access by fishery managers allows for inseason management of groundfish quotas in terms of total catch and of non-groundfish bycatch quotas. Real-time access by fisheries managers to observer data collected in the Pacific At-Sea Whiting fishery allow for in-season management and minimization of salmon bycatch.

More widespread sharing of bycatch data could help reduce bycatch and keep bycatch-limited fisheries open longer. However, the proprietary nature of observer data may limit its effectiveness in pursuing collaborative approaches to mitigation that involve sharing of data with fishery groups or non-governmental organizations.

Fadely (1999) argued that in the case of some Alaska fisheries where strandings or other information confirm fishing-related mortality of marine mammals, the best use of funds may be in outreach efforts to mitigate bycatch, rather than the collection of precise data on the level of bycatch occurring. Due to limited funds for the deployment of observers in the Gulf of Mexico shrimp otter trawl fishery, the design of the sampling program is geared more towards monitoring the effectiveness of gear modifications in reducing turtle and finfish bycatch than for bycatch estimation.

4.3.1.5 Safety in Observer Programs

The safety of observers is a significant factor that should be considered in any expansion of observer coverage. Fishing is widely recognized as one of the most dangerous professions (US Dept of Labor 2003). While a high level of safety training is provided in all NMFS observer training programs, the agency is limited in its ability to ensure the safety of an observed vessel, beyond requiring the vessel to take reasonable actions to ensure the health and safety of an observer. In 1998, NMFS published a final rule implementing the Observer Health and Safety regulations, in response to a directive in the MSA that required the agency to:

> *"... promulgate regulations, after notice and opportunity for public comment, for fishing vessels that carry observers. The regulations shall include guidelines for determining—*
> *(1) when a vessel is not required to carry an observer on board because the facilities of such vessel for the quartering of an observer, or for carrying out observer functions, are so inadequate or unsafe that the health or safety of the observer or the safe operation of the vessel would be jeopardized; and*
> *(2) actions which vessel owners or operators may reasonably be required to take to render such facilities adequate and safe."*

The Observer Health and Safety regulations specify that observers are not required to board an unsafe vessel (as defined by the lack of a US Coast Guard safety decal or other license certifying the

presence of certain safety equipment onboard). In most programs, observers are instructed during training to not deploy on a vessel that does not have a current vessel safety decal. However, this has not been a consistent policy in all NMFS observer programs. Even if a safety decal is present, observers may judge a vessel to be unsafe and may refuse to board the vessel. On the other hand, observers have significant incentives to deploy on questionable vessels or risk losing a deployment opportunity (and the associated pay for that deployment).

These regulations are in the process of being revised to require that all observed vessels display a current and valid safety decal, submit to and pass a pre-trip safety check, and maintain safe conditions at all times an observer is onboard. Additional measures that could be implemented include the requirement that each vessel in an observed fishery show proof that it has a current and valid safety decal as a term and condition of receiving or renewing a federally-issued fishing permit or license, and that unobservable vessels not be allowed to participate in a fishery that has a mandatory observer coverage requirement. However, this policy may favor larger vessels that can accommodate observers and exclude smaller vessels that cannot pass minimum safety and accommodation requirements.

The placement of government-employed observers on fishing vessels involves significant risk to the government, and over time this risk has been transferred to contracted observer service providers. NMFS is pursuing policy and legislative alternatives for addressing this risk, in close cooperation with observer service providers, observer representatives, fishing vessel owners and operators, the insurance industry, and risk management professionals (NMFS 2002 and 2003).

4.3.1.6 Observer Programs Summary

Observer programs are a reliable method for estimating bycatch. The quality of the data and the precision and accuracy associated with bycatch estimates are determined by sample size and the design and execution of a robust sampling scheme. Identification and accounting for sources of bias is critical, as are measures to increase both cost effectiveness and safety of observers.

4.3.2 Digital Video Cameras

The use of video cameras to monitor at-sea fishing operations is a relatively new technique, and has only been used in select fisheries to date. The methodology involves mounting one or more tamper-proof digital video cameras in various areas on a fishing vessel's deck or hull, and recording all or a portion of the fishing activities. An overview of the methodology being used by the primary developers of this technology, Archipelago Marine Research, can be found at the website: http://www.archipelago.ca/em-techno.htm. The components of a digital video monitoring system (also called an Electronic Monitoring system, or EM) are illustrated in Figure 2.

This technology can be used to monitor fishing activities to augment, or where appropriate, replace onboard observers. It can monitor such factors as the time and area of fishing, the use of special fishing requirements (e.g. tori lines), compliance with onboard catch handling requirements, and species caught and/or discarded. It was determined to be a promising option for assessing bycatch of seabirds in the Pacific Halibut Fishery off Alaska (Geernaert, et al., 2001). Currently, this technology has been applied on an experimental basis in at least two Federally-managed fisheries: the Alaska halibut longline fishery and the Pacific whiting trawl fishery. It is also being used extensively in several Canadian fisheries.

A recently completed pilot program in the Alaska halibut longline fishery has found video cameras to be extremely useful in compliance monitoring (Fitzgerald, Shannon, Alaska Fisheries Science Center, pers. comm.). Video cameras effectively identified catches of seabirds, with 64% of seabirds caught identified to species. In a pilot project for the Alaska trawl fishery, cameras were more effective than observers in monitoring seabird interactions with the trawl third wire, as interaction rates were low (one bird interaction in 18 hours) and would have required observers to stand out on deck for long hours.

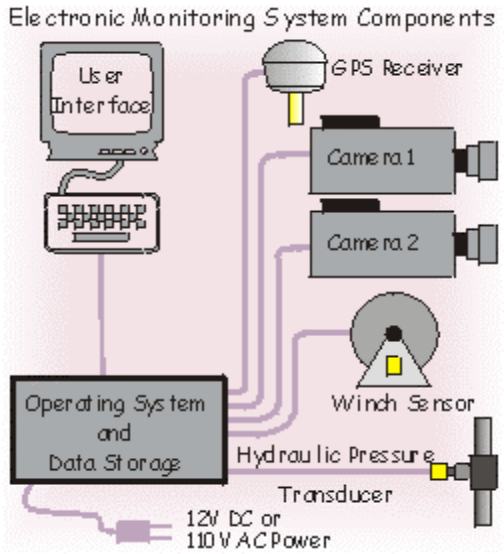

Figure 2. The components of a digital video monitoring system (courtesy Archipelago Marine Research)

The cost of video monitoring includes the cost of the equipment (3-5 cameras per vessel and a CPU with a removable hard drive), installation of cameras on vessels, and post-cruise analysis of the video stream. The estimated cost to equip 10 vessels for 60 days, including analysis of video, is approximately $90,000 (McElderry, pers. comm.). The equipment cost could be lower on a per day basis if the units were installed for a longer time period; however, the costs of analyses are more fixed. The units are somewhat tamper-proof, using the same safeguards as security cameras mounted in public areas. However, no camera is completely tamper-proof.

Concerns among fishermen regarding the widespread application of video monitoring are significant, and include the confidentiality of the images collected, and the potential for lawsuits if video monitoring records injuries to crew or other mishaps. Attention will need to be paid to resolving these issues and establishing policies and procedures for the disposition of electronic images before NMFS can proceed with full implementation of a video monitoring program. However, the potential for application of this technology to enhance current monitoring capabilities warrants its continued testing and application in U.S. fisheries.

4.3.3 Digital Observers

Digital observer technology takes the use of video cameras for monitor fishing activities one step further to using a digital scanner to record images of individual fish catch for electronic species identification and for length/frequency estimates. The scanner records several images of a fish as it passes through the scanner on a conveyor belt, and uses the best of these images to make its predictions and calculations. The primary developer of this technology is Digital Observer LLC of Kodiak, Alaska, for use in Alaska groundfish fisheries. Although this technology is still in a pilot phase, it appears to be software and hardware intensive. Further testing needs to be done to determine its potential utility for specific fisheries and/or gear types, and associated costs.

4.3.4 Alternate Platforms and Remote Monitoring

In instances when safety of observers aboard vessels is an issue or when logistics of placing observers aboard vessels is insurmountable, the use of small vessels to observe fishing operations may

be an option. Government-owned or leased vessels to observe fishing operations remotely have been employed in a few Federal fisheries to monitor bycatch. Sampling may target the fishery as a whole, or only those vessels that would otherwise be difficult to sample using an onboard observer.

Alternative platforms and remote monitoring may be considered a form of observer coverage: the only difference being where the observer is deployed and the costs of doing so. Therefore, many of the issues mentioned in Section 4.3.1 also apply here.

Alternate platforms have been used in the California drift gillnet fishery from 1993-1995, but were abandoned due to safety concerns, cost, and sampling limitations (Price, et al. 1999). The Northeast currently is operating an alternate platform observation program to monitor bycatch of sea turtles in the Chesapeake Bay pound net fishery. The sampling design uses a combination of fishery-wide sampling on a regular schedule, with more intensive sampling of problematic nets on a more frequent basis (Tork, Michael, NMFS Northeast Fisheries Science Center, pers. comm.).

Alternative platforms were used extensively in monitoring the Kodiak salmon set gillnet fishery in Alaska in 2002 (Van Atten, Amy, Northeast Fisheries science Center, pers. comm.). Two large chartered vessels (greater than 100') were used to transport observers from land sites to boats and from boat to boat and to provide housing for observers when necessary. Nine smaller skiffs (approximately 30'), operated by experienced commercial fishermen, were used to observe 10 percent of the overall effort. In some cases, the smaller skiffs were also used to transfer observers to commercial skiffs that were tending gear.

The advantage of skiffs in this instance was that: 1) observers did not have to depend on the fishermen to pick them up and drop them off; 2) once the behavior of fishermen was better understood, the observer would not have to make prior arrangements with the fishermen, they would just be at the net waiting for them; 3) if one fisherman decided not to fish or if they had mechanical difficulties, the observer had the flexibility to get to the next permit scheduled for coverage; 4) observers did not have to rely on or have to share the fishermen's limited resources; 5) it was easier to keep track of the location of observers; 6) by using their own skiffs, observers did not have to judge whether the commercial skiff would be safe and safely operated by the fisherman; 7) the observers had a better view of the fish being picked by being slightly in front of the picking skiff. Disadvantages were that skiff drivers that have local knowledge of the area and the fishery needed to be hired and properly trained in safety precautions and in sampling procedures. Typically, the best vessel operators were usually retired or ex-commercial fishermen (thus, there may be some perceived conflict of interest). However, using skiffs was more costly than just placing observers onboard the commercial boats. Also, skiff operators ran the risk of damaging someone else's fishing gear or affecting their catch by scaring fish (liability concerns).

In general, the use of alternate platforms should be evaluated in fisheries where there are concerns about unsafe vessels or inadequate accommodations, or where it is more efficient to observe fishing operations remotely due to the nature of the fishery. However, it should be noted that there may be similar safety and cost concerns whether observers are deployed on alternate platforms or on fishing vessels.

4.4 Stranding Networks

"Strandings" is the term used to describe when marine mammals or sea turtles swim or float

into shore and become "beached" or stuck in shallow water. Stranding “networks” have been established throughout the country to monitor the rate of strandings on beaches and to facilitate communication and reporting of stranding events. Typically, sampling is opportunistic and is dependent on the frequency of strandings in an area, the frequency of beach monitoring by network volunteers or others to report stranding events, the availability of network volunteers to respond to a stranding event, and their experience and training.

Marine mammal or sea turtle stranding networks have been established in all U.S. coastal states, and are authorized through Letters of Authority from NMFS regional offices. Many are supported by Federal funds to assist in the provisioning of sampling equipment to network volunteers, to provide training in necropsy methods and sampling and archival procedures, and for timely entry and analysis of stranding data.

Marine mammal stranding networks in the United States make up one facet of a broader, more comprehensive program called the Marine Mammal Health and Stranding Response Program (MMHSRP), established in the late 1980s in response to growing concern about marine mammals washing ashore in U.S. waters. The MMHSRP goals are: to facilitate collection and dissemination of data, to assess health trends in marine mammals, to correlate health with available data on physical, chemical, environmental, and biological parameters, and to coordinate effective responses to unusual mortality events. More information on the MMHSRP can be found at http://www.nmfs.noaa.gov/strandings.htm.

Only a small proportion of the animals that strand can be reliably attributed to fishing interactions, and fewer still can be attributed to specific fisheries. Hohn and Thayer (NMFS internal document, 1996) noted that from 1992-1995, of 374 bottlenose dolphins stranded along the coast of North Carolina and examined, 149 were in sufficient condition to evaluate whether death was caused by human interactions (fishing interactions as well as propeller wounds, lead shot, fishing lure or hook in the esophagus, etc.). Of those, 79 showed signs of fishery interactions. Similarly, in a sample of 66 stranded harbor porpoise recovered from the mid-Atlantic from 1993-1995, 21 had signs of entanglement in fishing gear. Further analyses for the Bottlenose Dolphin Take Reduction Team by Hohn et al. (2001) determined that fisheries interaction in particular could be attributed to 24 of the 605 bottlenose dolphins reported stranded along the Atlantic coast or in the estuaries of South Carolina, Georgia, and Florida. However, for the majority of strandings (63%), it was not possible to determine whether the mortality was human caused. This prompted recommendations by both the Mid-Atlantic Take Reduction Team and the Bottlenose Dolphin Take Reduction Team to increase observer coverage to verify the level of fishing-related mortality and the specific fisheries and gear types responsible.

Similar efforts have been made to determine the relationship of sea turtle strandings to fishing operations. Epperly et al. (1996) compared the number of sea turtles stranded on beaches in the vicinity of Cape Hatteras to the estimated number taken in the winter trawl fishery for summer flounder during November 1991-February 1992. They found that stranded sea turtles represented a maximum of 7-13% of the estimated fishery-induced mortalities. This suggests that not all turtles that died as a result of fishing operations washed ashore, due to such factors as distance from shore at the time of interaction, currents, weather, and the frequency with which beaches are monitored for stranding events. This highlights the limits to using stranding data as a sole indicator of fishing-related mortality, and as a means for estimating bycatch.

Stranding events can nevertheless be used to drive management actions. For example, an increase in strandings annually in waters off Virginia in May and June prompted a pilot study to investigate the occurrence and entanglement of sea turtles in pound net gear. The data from this and other small-scale studies, as well as inferences from strandings data, eventually led to the issuance of mesh size restrictions for pound net leader lines in the Chesapeake Bay (67 FR 41196, June 17, 2002). In February 2003, NMFS issued regulations to require larger openings on Turtle Excluder Devices

(TEDs) to ensure that leatherback turtles, as well as larger loggerheads and green turtles, could escape. The impetus for the larger opening requirements was based in part on new information showing that 33 to 47% of stranded loggerheads and 1 to 7% of stranded green turtles are too large to fit through the current TED openings (68 FR 8456, Feb. 21, 2003).

In summary, the use of stranding data can provide indications of where fishing-related mortality may be occurring, and direct further observations, but should not be the sole source of information used to make management decisions.

4.5 Summary

At-sea observations, fishery-independent data collection, logbooks and port samplers all may be used to obtain bycatch estimates. Each has specific advantages and disadvantages. Data collected from at-sea observation programs provide better estimates of bycatch than either fishery-independent surveys or self-reporting. Combined with reliable estimates of total fishing effort or landed catch, bycatch rates from observer data can be used to estimate total bycatch levels in a fishery. Sources of bias must be acknowledged and accounted for, and efforts made to limit biases wherever possible. Efforts should be made to increase the safety of observed vessels and to increase the cost-effectiveness of observers in order to increase the viability of observer programs as a management tool. Stability in observer program funding is also needed.

Where possible, analyses should be undertaken to compare logbook data to at-sea observations. Self-reporting in logbooks can be a useful adjunct to at-sea observer programs, but these should be subject to ground-truthing periodically. Typically, relying solely on self-reporting of bycatch will result in poor information on which to base management decisions.

Better information regarding the unobserved portion of the fleet, perhaps through the use of electronic monitoring (video cameras) and electronic logbooks, would be helpful in determining how to use observed bycatch data to improve estimates of total bycatch. More emphasis should be placed on testing, evaluating, and implementing alternative technologies (i.e., digital video cameras) as a means for complementing and supplementing at-sea observer coverage. At the same time, NMFS should strive to resolve issues of confidentiality and liability associated with electronic monitoring.

Continual efforts should be made to improve the integration of various fishery-dependent and fishery-independent data sources to ensure these data sets are used effectively in providing an accurate and comprehensive portrayal of what level of bycatch is occurring in each fishery and why. The implementation of the Fisheries Information System (NMFS 1998b) is an appropriate mechanism for providing the framework for a more integrated and coordinated system to increase accessibility and sharing of data.

Periodic reviews of the monitoring methods being employed in each fishery should be implemented to ensure that the proper suite of methods is being used to estimate bycatch, taking into consideration the known or expected level of bycatch, the nature of the bycatch, the configuration and diversity of the fishing fleet, and the need to obtain precise and accurate estimates of bycatch.

5. Estimation of Bycatch

5.1 Definition of Bycatch and Precision

Bycatch is defined as the discarded catch of any living marine resource ***plus*** retained incidental catch ***and*** unobserved mortality due to a direct encounter with fishing gear (NMFS 1998a). This definition includes marine mammals (MMPA), endangered species (ESA) and seabirds (MBTA), as well as fisheries resources (MSA species), although some distinctions among MSA, MMPA, ESA, and MBTA species precision will be made later. Of the three aspects of bycatch (discarded catch, retained incidental catch and unobserved mortality), measures of precision are needed primarily for estimates of discarded catch and unobserved mortality.

Retained incidental catch estimates usually can be assessed relatively easily since the data collection mechanisms for doing so are identical to those used for measuring targeted landed catch. Thus, typically there is no distinction made between targeted and incidental landings. Landed commercial catch (whether incidental catch or targeted catch) is usually determined by systems of logbooks, trip-tickets, dealer reporting, and direct monitoring at landing sites or on at-sea processing vessels. One exception is the use of observer data to estimate total catch (i.e., both retained and discarded catch) for much of the at-sea processing sector in the Alaska groundfish fisheries. But, normally, issues of concern to commercial landings statistics are usually accuracy-related (misreporting), rather than precision-related.

For most recreational fisheries, total catch, including landed and discarded catch, is estimated from statistical surveys in which precision *is* an important design component. And as with commercial landings, typically no distinction is made between targeted and incidental landings. The recreational surveys are designed to determine catch estimates for a given amount of precision, regardless of whether it is targeted or not.

Unobserved mortality due either to direct encounters with fishing gear before it is retrieved or to handling induced mortality of discarded catch is not easily estimated. If estimates can be made, the typical method is to multiply the number of discards (or encounters) by a rate of post-encounter mortality (by appropriate strata). Monitoring procedures are designed to determine the number of discards, but additional experiments are needed to determine post-release survival rates, encounter rates that do not result in catch, and the survival rates after such encounters. The experiments include such studies as: *in situ* survival experiments in traps, tagging of discarded fish to compare tag-return rates from fish released using standard fishery practices versus those released using experimental procedures, underwater observation, or electronic tagging and tracking. Estimates of post-encounter mortality are virtually always inferred from experimental programs. Therefore, a scientific effort that is qualitatively different from bycatch monitoring is required.

Since precision issues are not important to retained incidental catch *per se* in most fisheries, be they recreational or commercial; and since unobserved bycatch mortality cannot be determined using a bycatch monitoring program, in this report the discussion of bycatch precision will relate only to the discard portion of the bycatch.

Furthermore, when the notion of "precision" is discussed in this document, we are generally referring to the extent to which bycatch estimates are likely to vary in repeated sampling. More specifically, our standard measure of precision will be the *coefficient of variation*, which is given by the ratio of the square root of the variance of the bycatch estimate (i.e., the standard error) to the estimate, itself. By using this measure, one is able to compare the variances of distributions that have large differences in their means or units of measurement. For example, a coefficient of variation (*CV*)

of 30% implies that the size of the standard error is 30% as large as the estimate. Smaller coefficients of variation indicate greater precision: a 0% *CV* means that there is no variance in the sampling distribution, and thus no estimation error if the estimator is unbiased. Alternatively, *CV*'s of 100% or greater have poor precision with the standard errors being equal to or larger than the estimate. Usually in fisheries surveys, *CV*'s of 20-50% are the norm.

The variance of an estimate depends upon the underlying variation of the biological and fisheries processes and the number of data points or observations used in making an estimate (denoted by the sample size, *n*). For example, for large samples the precision (*CV*) of an estimate is inversely proportional to the square root of the size of a sample. Since larger sample sizes usually imply larger survey costs, this demonstrates that reductions in the CV will require additions to both sample size and budgets – an important planning consideration. Elaborate statistical designs may be developed to allow one to decrease the CV for a given sample size by including various stratifications and to allow for clumping of the animals and fisheries; however, the basic relationship between CV and sample size should be considered within any proposed sampling design.

Additionally, it should be noted that in this report the precision to be discussed will be that related to *annual* estimates of bycatch, not seasonal or monthly estimates. This focus was chosen because the requirements for within-year precision are much more data and logistically demanding, and because, at a minimum, effective bycatch monitoring and management require estimates on an annual basis. Accordingly, the focus of the discussion will be on the *CV*, variance and associated sample sizes needed to compute annual estimates of discards with varying levels of precision. However, there are instances in which the management needs are more rigorous, especially when more detailed estimates are needed to determine how to reduce bycatch and how far to reduce it. Thus, more detailed management procedures may require more refined statistical precision goals. In particular there are circumstances (such as rare or protected species) where the absolute precision in numbers of animals is the more appropriate goal.

5.2 Estimation from At-Sea Observations

Estimation of at-sea discards involves the observation of fishing activities as they occur on the ocean. Typically, at-sea observation will involve human observers placed on the vessel. However, as noted in Section 4, technologies other than observers may exist to obtain the at-sea observations. From the standpoint of estimation and sampling design, it does not matter how the observation is made; what matters is the measurement reliability and the cost of that observation. We recognize that in most cases under current technology, human observers will be the most effective method of obtaining at-sea observations. However in this report we will refer to *observations*, to emphasize that observations may be obtained in a variety of ways other than human observers.

The development of a sampling strategy for estimation of bycatch based on an at-sea observation program entails first clearly defining the objectives of the sampling program and selecting a sampling strategy designed to meet these objectives. Further critical requirements include the specification of the sampling frame from which to draw samples and sample selection procedures, the designation of sampling strata and allocation strategies, and the identification of appropriate estimators. An explicit statement of the objectives of the program is a critical step in devising effective sampling procedures. For example, an at-sea program designed with the objective of estimating fishery discards may be quite different from one designed to assess incidental takes of protected species, particularly if the latter represent rare events. When there are multiple objectives for an observer program, the program design often will need to address competing objectives and the optimal design cannot be determined unless weights have been assigned to the various objectives. Basically, when there are

multiple objectives, it becomes much more difficult to clearly define the objective (including the weights to be used), to identify the appropriate sample design, and to identify the desired level of precision for each estimate.

Ideally, the statement of the objectives of the program will entail not only the identification of the critical bycatch issues for the program (fishery discard, incidental take of protected species etc.) but the desired level of precision for the estimates. The latter will entail consideration of the acceptable level of risk associated with uncertainty in the bycatch estimates and the cost of improving precision.

The specification of a probability-based sample selection scheme, while difficult under some circumstances in at-sea programs, is a critical step in avoiding potential biases that can develop with non-representative sampling based on *ad hoc* sample selection. The selection of sampling strata for each fishery is essential both in distributing the sampling effort over relevant spatial and temporal domains and in increasing precision of the estimates when relatively homogeneous strata can be defined. The choice of allocation strategies for sampling effort among strata will depend in part on the state of development of the sampling program. The choice of estimators for bycatch and its variance will depend on the nature of the available information and the objectives of analysis but will often involve some form of a ratio estimator where information on total catch and/or effort is used as an auxiliary variable. For situations in which each haul of the gear cannot be observed, it will be further necessary to select hauls within fishing trips to sample according to a specified probability sampling scheme. Finally, either when additional biological samples are to be collected (size composition, collection of structures for age determination etc.) or when it is not feasible to sample the entire haul, strategies for the selection of a subsample will be required. Each of these issues is described in further detail below (see also Figure 3).

There are several distinct stages in the evolution of an at-sea sampling program. The initial stage in fisheries for which no at-sea coverage has been attempted is the establishment of a program to collect baseline information on the fishery and fishing practices with particular emphasis on bycatch rates and factors affecting bycatch (Table 3). Typically this will involve the establishment of initial strata defined by time and area (see below) and the deployment of observers or other observation systems within each spatial and temporal unit. Because this is an exploratory effort, it is likely that a uniform allocation of sampling effort among strata will be useful unless ancillary information is available to guide more targeted sampling. The baseline study can be viewed as a preliminary pilot program. We recognize that a more intensive pilot study will often follow the baseline phase (or may be implemented directly in instances where no existing observer coverage has been deployed but where sufficient auxiliary information exists to develop a more detailed sampling program). It is anticipated that a full pilot program will permit refined estimates of variance as the basis for developing an enhanced sampling strategy (Tables 4.1-4.6). We identify a developing program as one in which a well-defined stratification scheme has been established based on known fishery characteristics and where an evaluation of alternative strategies has been made to develop an

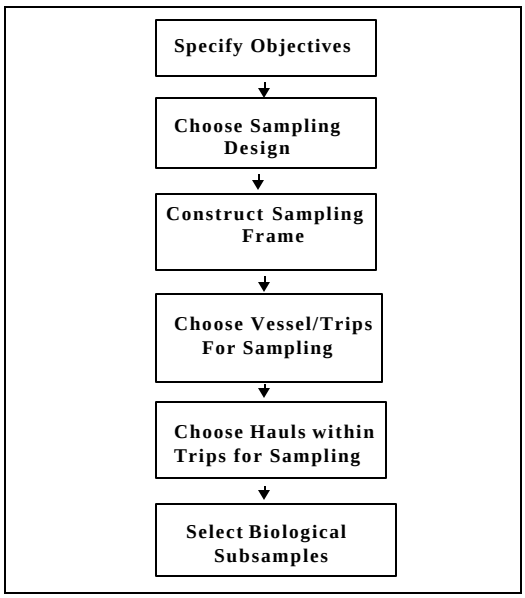

Figure 3. Steps in developing a sampling strategy to estimate bycatch using at-sea observations

optimal allocation scheme to provide the highest possible precision for a given observation program budget (Table 3). Finally, we identify a mature sampling program as one in which an optimal allocation scheme has been implemented and the target levels of precision are being met for the species of major concern (Table 3)

Table 3. Developmental stages for observation programs.

Observer Program Level	Definition
None	No *systematic* program exists for bycatch data collection
Baseline	An initial effort including at-sea monitoring to assess whether a systematic program is needed to estimate bycatch is completed.
Pilot	An initial at-sea monitoring program that obtains information from relevant strata (time, area, gear) for design of a systematic program to estimate bycatch with the ability to calculate variance estimates has been done.
Developing	A program in which an established stratification design has been implemented and alternative allocation schemes are being evaluated to optimize sample allocations by strata to achieve the recommended goals of precision of bycatch estimates for the major species of concern.
Mature	A program in which some form of an optimal sampling allocation scheme has been implemented. The program is flexible enough to achieve the recommended goals of precision of bycatch estimates for the major species of concern considering changes in the fishery over time.

The developmental stages of observation programs as defined in Table 3 were used to classify the progress each fishery is making toward bycatch monitoring goals (see Section 6).

5.2.1 Sample Selection

The development of a sampling frame is a critical first step in the selection of samples in any observer program. The importance of establishing a well-defined probability sampling scheme cannot be overemphasized. Although an ad hoc sample selection procedure can potentially provide valid results, it will generally not be possible to ensure that biases due to non-representative sampling have not entered into the estimates. The development of a probability-based sampling scheme requires definition of the units available for sampling. In most instances, this will involve a sampling frame comprising the vessels actively engaged in the fishery. Following the designation of sampling strata and decisions concerning the allocation of samples within strata (described below), a random sample is drawn from the list of vessels operating within the spatial and temporal units defined. It is recognized that differing degrees of cooperation and willingness to accommodate observers are often encountered. In addition, it may not be possible to make a trip on a selected vessel because it may not be operating during the specified time periods due to maintenance schedules or other considerations. Accordingly, it will be necessary to draw samples randomly until the target sampling levels within strata are attained. The procedure would involve randomly selecting vessels to be sampled, contacting the vessel owner or captain to ascertain whether a trip will be made within the specified time frame and whether an observer can be accommodated, and continuing until the number of trips designated for that stratum meets the target levels. Where possible, it should be a requirement that vessels accommodate observers when requested unless justifiable extenuating circumstances exist. This will greatly reduce difficulties and potential biases introduced by non-cooperation by different vessel owners or captains.

The considerations above pertain to the case where an attempt is being made to sample fishing trips as the unit of observation. Vessels are chosen randomly to meet the goal of sampling a specified number of trips. In some cases, the vessel itself is of direct interest because of requirements attached to fishing permits etc. as in some Alaska fisheries. In this case, a random choice of the trips to be sampled for each vessel is desirable and again, the potential for bias will be minimized if timing of sampling trips aboard particular vessels is not left to the discretion of the vessel owner or captain.

For the case where all hauls cannot be observed during a fishing trip, a sample selection scheme for selecting hauls will be necessary. Given an initial estimate on how many hauls will be made during the trip, several approaches are possible. A systematic sample with random start points can be employed in which a choice of which haul to initially sample is randomly made and then every nth haul is sampled thereafter. For example, if it is anticipated that every other haul could be sampled, a random draw could be made of the first three hauls (say) and then alternate hauls sampled. However, if the expectation is that fishing practices differ when the crew know that a haul will be sampled, systematically choosing alternative hauls may introduce bias. Consideration of factors potentially affecting bycatch should enter into the decision of how to distribute the sampling. For example, it may be desirable to sample throughout the day and night periods to avoid biases that would result from differential bycatch rates by diurnal period in a fishery which operates on a 24-hour basis. In this case, consideration of the haul time, and duration between hauls will be become critical.

An alternative strategy will be to make an initial random selection to determine which hauls to sample for the duration of the trip (taking care to select more than the expected number of hauls), possibly stratified by time of day. Although this design allows for the spacing of sampling by observers to allow adequate sample processing, rest periods, and other factors, this design may be less desirable than some form of systematic sampling.

Selection of a sub-sample of a haul either for biological information such as size composition or when it is not feasible to sample the entire haul will depend on the operational procedures onboard the vessel. For example, when the catch is placed on a conveyor belt system for culling, observers can readily select samples randomly from throughout the entire catch to avoid potential biases associated with clustering of individuals with similar characteristics (e.g. size) in different portions of the catch. If sorting and culling is done directly on deck, it will be desirable to select samples randomly from different portions of the catch and to do so before sorting and culling occurs.

However, there are often difficulties in implementing these procedures. For example, if the list of active vessels is stable, selecting vessels using a probability sampling scheme is reasonable. But if not, this may mean that a two-stage sampling design is required with vessel as the primary sampling unit and trip as the secondary sampling unit. If vessels are selected with equal probability and an equal number of trips are selected with equal probability for each selected vessel, trips from different vessels will have different probabilities of being selected, unless all vessels do the same number of trips. If the specified time period is short enough that a vessel makes, at most, one trip during the time period, then trips are selected with equal probability. However, if several vessels depart about the same time, there might not be a sufficient number of observers to place onboard each vessel. If selected trips are determined when an observer is available, trips may have an unequal probability of being sampled. Furthermore, each time period needs to be treated as a stratum since randomization is restricted within the time period. Thus, while it is easy to recommend an equal probability sample, it can be very difficult to obtain.

5.2.2 Sampling Strata

Spatial and temporal variation in bycatch levels will typically dictate the use of area-time designations for sampling strata in observer programs. In instances where the fishery involves multiple gear types and fishing strategies, it will be further important to employ appropriate strata for each gear type and fishing strategy. The specification of geographical strata will often be linked to predefined statistical areas used for assessment purposes for the stocks under consideration. Under some circumstances, these areal designations will also be linked to ports in which observers are stationed and from which vessels depart to fish in particular statistical areas. The choice of strata should entail consideration of defining relatively homogeneous sampling units with respect to the occurrence of bycatch. Under certain conditions, there may be a need for post-stratification evaluation. In the Northwest, depth strata cannot be predefined because different tows of a trip are operating in several depth strata. The depth is a primary factor of distribution of some species. Evaluation can be done by comparing relative variance of the estimator. This situation will pose difficulty for sample allocation as the fishing depth(s) is not clearly defined a priori. The number of strata to be employed also entails consideration of the level of overall sampling effort possible given funding constraints. A large number of strata will typically mean that the sample sizes within strata will be low, resulting in relatively high within-stratum variances and this should be avoided.

The choice of temporal strata will be tailored to the characteristics of the individual fishery. The within-year sampling units will generally be defined at the quarterly level or at finer scales (e.g. monthly or weekly) depending on how the fishery is prosecuted and consideration of the temporal variability in bycatch rates as a function of recruitment and seasonal distribution patterns. Although no generic guidelines can be established to apply to all regions, it is important that the entire fishing season be covered.

5.2.3 Sample Allocation

In the initial stages of observer program development, it is likely that a uniform allocation of sampling effort will be necessary to permit specification of the fishery bycatch characteristics. Within-stratum sample sizes would be equal in this phase for baseline studies and potentially for pilot study programs unless additional information to guide allocation strategies is available.

In instances where more detailed information on the fishery is available in terms of fishing effort, catch, and/or bycatch, alternative allocation strategies can be considered. For example, allocating sampling effort to strata in proportion to the fishing effort or overall catch within these spatial and temporal units can be an effective strategy since discards can be expected to vary in proportion to total catch and/or effort. This can be particularly effective where the variability in bycatch increases as the bycatch level increases as will often be the case.

An optimum allocation scheme would entail identification of strata within which high variability in bycatch occurs and placing additional sampling effort in these strata to minimize the variance for a specified funding level. Because different strata may exhibit higher levels of variability over time, it can be expected that an optimum allocation scheme would have to be adjusted to meet existing conditions. Typically, a specified budget level is comprised of fixed costs (administrative costs, data management and analytical services, etc.) and variable costs related to at-sea operations). The allocation of sampling units to strata is made in a way which minimizes the overall variance given constraints on these costs.

It is recognized that in a multispecies setting, it will be difficult or impossible to define allocations strategies that will optimize the sampling for all bycatch species. The approach adopted in this report is

to emphasize approaches to optimize sampling for the total bycatch. This is not a problem if protected species are not taken and either few species are taken as bycatch or bycatch mortality is not a major source of uncertainty for stock assessment for the bycatch species. However, it is recognized that circumstances may require concentration on selected species or issues (e.g. discards of over-exploited species, incidental takes of threatened or endangered species) and this will require additional approaches such as the use of post-stratification schemes tailored to individual species or groups of species and/or the use of targeted supplemental sampling to address specific concerns.

5.2.4 Estimators

Ratio estimators have most often been employed in estimation of bycatch levels. For estimation of fishery discards, the ratio of the discarded to kept catch is computed for each unit of observation. The sampling unit may be a haul, a trip, or some other unit. For bycatch of protected species, the ratio of the number of individuals of the protected species to the kept portion of the catch is often used. The total discard or incidental catch in the fishery can then be computed as the product of the ratio of bycatch to kept catch and the landings in the fishery. An alternative ratio estimator when the total effort in the fishery is known would be based on the discard or incidental take per unit effort. In this case, the total discard or incidental catch would be based on the product of the ratio of bycatch to effort times the total effort. In both cases, the estimates would be computed at the stratum level and then summed over strata to obtain the totals.

The choice of the appropriate sampling unit (e.g., haul, trip, etc.) will be dictated by logistical considerations and evaluation of the statistical properties of the observations (e.g. independence among hauls within a trip, etc.). In instances where the bycatch rates are not independent among hauls within a fishing trip, it will be desirable to consider the trip as the unit of observation (or alternatively, to explicitly model the covariance structure among hauls within trips).

To estimate the bycatch on a species by species basis, the total bycatch can be determined as a ratio estimator as described above and the proportion of each species contributing to the bycatch would be estimated in a separate stage. The bycatch for each species is then given by the product of the total bycatch and the proportion of each species contributing to the bycatch. The variance of the bycatch is then a function of the variance in the total discard estimate, the variance of the proportion of each species, and the covariance between the total discard and the proportion of each species in the discard component.

Estimation of rare events presents special challenges. For example, if sampling bycatch, entanglement, etc. of certain threatened or endangered species is a primary goal, sampling designs specifically developed for estimating the occurrence of rare events may be desirable. If the rare events exhibit some form of clustering in space and time, it may be effective to utilize an adaptive sampling design in which once an event is detected, additional samples are allocated in the region surrounding the observed event as quickly as possible. If the chance of such an event can be predicted based on previous occurrences at specified time and locations, the initial sampling effort can be allocated accordingly with additional sampling effort deployed in temporal and spatial proximity to any observed events.

The ratio estimator referred to in this report assumes an equal probability sample. This is not a reasonable assumption for all observer programs. Making this assumption when it is false will likely result in a biased estimate. If the relationship between the observed variable and the ancillary variable of the ratio is linear and effective sample size is moderate, the bias of the ratio estimator is negligible. However, there are circumstances when these assumptions are violated and thus bias may be a

problem. For example, if there are no birds in the vicinity during the fishing set, the bycatch will be zero regardless of the effort. If there are birds present then there is a possibility of a bycatch. The ratio estimator is not robust towards the departure of the assumption of a simple linear relationship between the variable of interest and the auxiliary variable throughout the range of both variables. Saturation could also result in the ratio estimator being bias. Second, if bycatch is extremely rare, the effective sample size is significantly smaller than *n*. Therefore, a very large sample is likely needed for the estimator's bias to be negligible. For example, regardless of the sample size *n*, it seems that bias may be significant if there are just one or two observed bycatches. This is the situation for several of the protected species. It is important to understand the circumstances where that the bias is negligible.

5.2.5 Sample Size Requirements

One can specify the sample size required to achieve a desired coefficient of variation (CV) for the discard estimate if one has estimates of the sample variance (which is comprised of the variance in discard levels and variance introduced by the nature of the sampling procedures). Assuming that the fraction of trips sampled will be relatively low (say less than 10%, so that the finite population correction factor can be ignored), the necessary sample size for an optimum allocation scheme will be a function of the sum of the sample variances over strata divided by the squared product of the desired coefficient of variation and the estimated discard level. The latter estimate can be based on a previous estimate of the total discard level from a pilot study or previous estimates. To a first approximation, the necessary sample size to meet a target CV level can be expressed as the product of the inverse of the desired coefficient of variation and the square of the observed CV of the discard level. If the sampling fraction is not negligible (say greater than 10%), adjustments to the estimate will be required.

When determining sample size, the size needed to obtain required precision and accuracy should be the leading force, but there are other considerations. The sample size should be sufficient to assume the Finite Central Limit Theorem or other theorems that provide justification for assumed asymptotic distributions. Also, the sample should be large enough to test the validity of the estimator's assumptions if they have not been validated. For example, if using the ratio estimator, the simple linear relationship between bycatch and effort should be verified throughout the range of effort.

5.2.6 Accuracy and Bias

The discussion of sampling design has primarily addressed precision, i.e., the amount of random error that occurs in estimates due to the variability. However, accuracy is also a concern: are the vessels which are being observed representative of those that are not? Issues related to representativeness, bias and accuracy were discussed in Section 4.3.1.1 Accuracy and Bias in Observer Programs. Accuracy is difficult to address in statistical designs of observation programs. The act of observation often alters behavior and there is not a clear-cut way of determining whether the changes in behavior are significant. Therefore, indirect methods of comparison should be instituted where possible. For example the areas, times and catch of target species sometimes may be compared between observed and unobserved vessels to determine if fishing operations are statistically similar (for example, Walsh et al. 2002). This kind of verification checks should be made periodically.

5.3 Precision of Bycatch Estimates

Precision requirements for bycatch estimates depend upon the management procedures for which the estimates are being used. Additionally, there are a number of issues about statistical sampling which color our ability to obtain precise estimates. In this Section the issues relating to precision are discussed, followed by recommendations for specifying that precision. The discussion is organized in the following manner: 1) definition of what is meant by precision in the context of this Section and the categories of bycatch that need estimates of precision; 2) the likely management use of bycatch estimates; 3) tradeoffs between precision of the aggregate of all species in a fishery's bycatch versus having precise estimates of individual species within that aggregate; and 4) options for specifying precision and recommendations for preferred options.

5.3.1 Management Uses of Bycatch Estimates

Any discussion of precision requirements for bycatch estimates depends upon the management uses to which the estimates are being put. What are managers doing with the bycatch estimates?

Typically there are three primary uses for bycatch estimates. One use is when the estimates of bycatch of a particular species are incorporated into the analyses by which the status of that species-resource is being evaluated, i.e., into the stock assessment. A second use is for direct management purposes: to evaluate bycatch between and among catch allocations standards; e.g. to evaluate bycatch in relation to a quota. A third use is to utilize bycatch estimates in order to guide management on actions that might be taken to mitigate bycatch.

5.3.1.1 Assessment Uses

An assessment of a population or stock of a living marine resource results in estimates of management related quantities, e.g. total allowable catches (TACs) for fishery resources, potential biological removals (PBRs) for mammals, or incidental take statements for endangered species. Uncertainty in a stock assessment and in the resulting estimates of management-related quantities will depend upon a number of factors. Contributions to the uncertainty in a species' TAC or PBR include: 1) the magnitude and precision of the bycatch of that species; 2) of other sources of mortality (directed catch, natural mortality); 3) of survey indices or direct estimates of abundance; 4) of the biological distribution of the species (for example, age and sex distribution and spatial-temporal distribution); and 4) the status of the resource relative to the management quantities. Figure 4 shows the structure of a general stock assessment. Thus, the precision of bycatch estimates may not be the limiting factor in the precision of estimates of TACs or PBRs. Often other factors are more important. Exceptions occur when the bycatch is large relative to the overall catch of that stock. There will be tradeoffs between the precision of the assessment components (including the precision of the bycatch) and the precision of management quantities such as TACs or PBRs (Appendix 2).

Generally, one wishes to increase the precision of all components of an assessment of a stock, not just the bycatch of that stock. Additionally, one would invest more heavily in activities which would reduce uncertainty in the management quantities, and that may or may not be the bycatch component (Powers and Restrepo 1993). Nevertheless, we strive to obtain a balance in which estimates of management quantities are reasonably precise (Gabriel and Fogarty in press). ASMFC (1997) recommended that precision of the estimates of bycatch of a stock be in the order of a 20-30% CV, recognizing the importance of the various assessment components.

5.3.1.2 Monitoring Relative to Management Standards

A second management use of bycatch estimates is direct comparison of the estimate with some management standard or with other sources of mortality, such as the Potential Biological Removal (PBR) for a marine mammal stock (Barlow 1999). An example of a management standard might be some upper limit on bycatch that managers are trying to keep below. Thus, the precision of the bycatch estimate directly relates to the probability that the *true* bycatch level (not the *estimated* level) is or is not below the limit. An example of a comparison with another source of mortality might be when allocations of a TAC are being made between the catch and bycatch of a species; and in that case, the precision of both the bycatch and the catch directly relate to the probability that one source of catch is larger than the other. In both of these examples, precision relates to straightforward statistical comparisons of bycatch with some standard or other source of mortality. Precision requirements depend upon how sure the manager wants to be that the bycatch is below that standard. A simple rule of thumb is that if you want to be about 84% sure that "true" bycatch level is below some standard then the ratio of the standard to the bycatch estimate should be greater than 1 plus the CV of the estimated bycatch; if you want to be about 98% sure then it should be 1 plus twice the CV of the estimated bycatch. For example, if bycatch is estimated with a *CV* of 50% then that estimate has to be approximately two-thirds of the standard before one is 84% sure that the true value is less than the standard; and the estimate has to be about half to be 98% sure. If the precision of the estimate is 20%, then the estimate has to be 83% or 71% of the standard before one is 84% or 98% sure, respectively, that the true value is less than the standard. Clearly with higher precision (lower *CV's*), one can manage closer to the standard and still be confident of not exceeding management targets. Indeed, that is the goal of efficient statistical designs: to be able to make more efficient and flexible management decisions.

A second management use of bycatch estimates is direct comparison of the estimate with some management standard or with other sources of mortality, such as the Potential Biological Removal (PBR) for a marine mammal stock (Barlow 1999). An example of a management standard might be

some upper limit on bycatch that managers are trying to keep below. Thus, the precision of the bycatch estimate directly relates to the probability that the *true* bycatch level (not the *estimated* level) is or is not below the limit. An example of a comparison with another source of mortality might be when allocations of a TAC are being made between the catch and bycatch of a species; and in that case, the precision of both the bycatch and the catch directly relate to the probability that one source of catch is larger than the other. In both of these examples, precision relates to straightforward statistical comparisons of bycatch with some standard or other source of mortality. Precision requirements depend upon how sure the manager wants to be that the bycatch is below that standard. A simple rule of thumb is that, if you want to be about 84% sure that the "true" bycatch level is below some standard, the bycatch estimate must be less than or equal to the standard divided by (CV + 1). For example, if the CV is 0.5, the estimate of bycatch would have to be no more than two thirds of the standard for one to be about 84% sure that the "true" bycatch level is below the standard. Similarly, if you want to be about 98% sure that the "true" bycatch level is below some standard then the bycatch estimate must be less than or equal to the standard divided by [(2 x CV) + 1]; with a CV of 0.5, the estimate of bycatch would have to be no more than one half of the standard for one to be about 98% sure that the "true" bycatch level is below the standard . With CV of 0.2, the estimate of bycatch would have to be no more than 83% or 71% of the standard, respectively, for one to be about 84% or 98% sure that the "true" bycatch level is below the standard. Clearly with higher precision (lower *CV's*), one can manage closer to the standard and still be confident of not exceeding management targets. Indeed, that is the goal of efficient statistical designs: to be able to make more efficient and flexible management decisions. Note that these rules of thumb assume that estimates result from normal distributions. More formal analyses would be needed for most comparisons.

5.3.1.3 Developing Mitigation Plans

The third management use of bycatch estimates is to structure a mitigation program, i.e., the estimates are used to design measures to reduce bycatch. For example, bycatch estimates might inform managers whether it is more likely that closing an area will reduce bycatch mortality more or less than requiring a gear modification; or requiring changes in gear deployment versus instituting quotas. From a statistical standpoint, this is the same use of the data as discussed in the previous Section (Section 5.3.1.2 Monitoring Relative to Management Standards). However, the difference is that these decisions are often focused on finer spatial and temporal scales than what is usually used for annual bycatch estimates. The managers may wish to know (and compare) bycatch estimates for one area versus another, or one month versus another. With requirements for finer scales, comes requirements for additional sampling in order to maintain comparable precision.

5.3.2 Precision of Bycatch Estimates from Fisheries

The discussion above focuses on the precision of bycatch estimates taken from a single *stock* of fish or a single *stock* of a protected resource and the management uses of these estimates. Clearly, there is a need for single-species estimates for use in assessments and for other management needs. However, a single *fishery* may have bycatch of more than one stock of fish or protected resource, sometimes from many stocks. Therefore from a practical standpoint, often the entire fishery needs to be monitored, not just selected species within the bycatch. Thus, if standards of precision for bycatch estimation are established for *fisheries*, the effect on precision of individual species needs to be known. The relationship between the precision of the estimate of bycatch from a fishery (i.e., the bycatch of all species or stocks aggregated) and the precision of the estimates of the individual stocks within the bycatch needs to be understood.

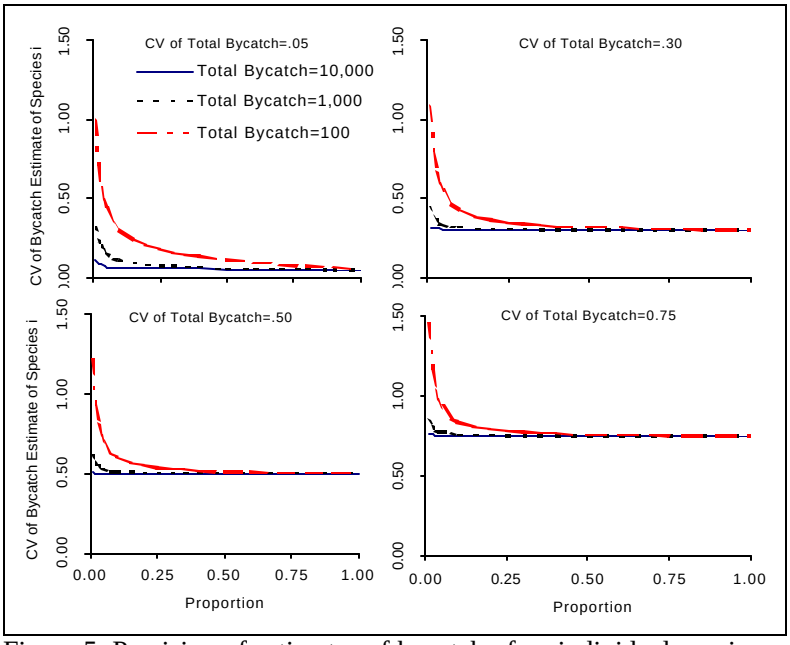

Figure 5. Precision of estimates of bycatch of an individual species (*species i*) as a function of the total bycatch aggregated over all species, the CV of the total aggregate bycatch and the proportion of the total that species *i* represents.

When estimating catch or bycatch from fisheries data, survey or observation programs usually are designed to address estimations of bycatch of multiple species, rather than being designed specifically for the estimate of bycatch of an individual species. The reasons for this are: 1) more than one species is of concern to managers; 2) the species which are of little concern today may be of great concern in the future; 3) sampling designs can be more efficient when directed at more than one species. Therefore, observations are often designed to obtain bycatch estimates of the aggregate of all species combined with a specified precision. However, in doing so the precision of an individual species will be less, sometimes considerably less, when a species comprises a small percentage of the aggregate (Figure 5, Appendix 3). Precision of bycatch estimates for an individual species deteriorates disproportionally when the proportion is below 10-15%. This is especially so when the aggregate bycatch is small. This suggests that some pragmatism might be required in specifying precision requirements, particularly when there are multiple bycatch species of concern in a fishery.

5.4 Precision Goals for Estimating Bycatch from a Fishery

Establishing precision standards for the estimation of bycatch will always depend on management objectives, management uses of the information likely precision of other information used in a decision, and the cost of increasing the precision of the bycatch estimate. Ideally, standards of precision would based on the benefits and costs of increasing precision. More often though, managers specify the available budget estimating bycatch and then scientists determine the precision that can be achieved for that budget. In either case, the precision will be a function of a number of fishery-specific factors. For these reasons, this report specifies *precision goals*, rather than precision standards. These CV goals are levels of precision to which NOAA Fisheries strives to achieve. However, it is important to recognize that (1) there are intermediate steps in increasing precision which may not immediately achieve the goals; (2) there are circumstances in which higher levels of precision may be desired, particularly when management is needed on fine spatial or temporal scales; (3) there are circumstances under which meeting the precision goal would not be an efficient use of public resources; and (4) there may be significant logistical constraints to achieving the goal. However, a decision to accept lower precision should be based on analyses and understanding of the implications of that decision. Therefore, flexibility should be considered when setting CV targets. For example, the rare-event nature of encounters with some protected species might mean that CV's of 20-30% cannot be attained and that precision in absolute numbers be considered. In such a case more adaptive management-observation systems may be needed. Also, if CV's of 20-30% for *individual* fishery species can be obtained and are needed for management, then this precision should be encouraged.

Management uses of bycatch estimates for protected species are the same as those for fishery resources, i.e., for determination of management quantities, such as PBRs, and for evaluating bycatch relative to an allowable take. However, precision of estimates of bycatch of protected species is often not the most important factor in determining the precision of an assessment of that protected species or stock. The reason for this is that often the absolute magnitude of the take of that species is small. Thus, assessments often are driven more by the precision of abundance surveys or population estimates and associated information than by that of bycatch. Nevertheless, the evaluation of bycatch relative to allowable takes *is* important in the management of protected species (Barlow 1999). Precision goals for protected species should emphasize this aspect of management. Precision of 20-30% *CV*'s on the bycatch of many protected species or stocks would mean that managers would know that the bycatch is below an allowable take with a reasonably high probability. However, because protected resource bycatch is often rare, some flexibility is needed when establishing precision goals. In particular, the absolute precision (in numbers of animals) may be more appropriate than the percent precision (see Appendix 4 for technical comments on this issue).

Precision goals for bycatch of the *fishery resources* within a fishery should recognize that often there are a number of species within the aggregate bycatch. If the precision of the aggregate has a CV of 20-30%, then the CV of an individual species within that aggregate will have a comparable CV's unless the aggregate is small and the proportion of the total that that species represents is, also, small (Figure 5). However, if the aggregate is small and the proportion is small, then the bycatch of that species will be on the order of a few animals. If bycatch of a few animals is significant to a population, then that population probably falls within the protected species realm (above).

The role that bycatch plays in the CV of the management quantities derived from an assessment of a fishery resource can be varied. A CV on TAC of 20-30% is a useful management goal (Powers and Restrepo 1993). Additionally, the Atlantic States Marine Fisheries Commission (ASMFC) recommended a target 20-30% CV for both finfish and protected species (ASMFC 1997). Hence, a

20-30% CV for the bycatch estimate is a useful goal.

Note that in some instances, management is focused on monitoring total catch of a fishery resource of which bycatch is an important component; and in this case the sampling design has been structured to estimate total catch including bycatch. In these situations the precision of the bycatch component is not easily teased out. However, in these instances a goal of 20-30% CV for the total catch including bycatch appears to be sufficient.

Precision Goals for a Fishery

Protected Species

For marine mammals and other protected species, including seabirds and sea turtles, the recommended precision goal is a 20-30% *CV* for estimates of bycatch for each species/stock taken by a fishery.

Fishery Resources

For fishery resources, excluding protected species, caught as bycatch in a fishery, the recommended precision goal is a 20-30% *CV* for estimates of total discards

Flexibility should be considered when setting targets. For example, the rare-event nature of encounters with some protected species might mean that CV's of 20-30% cannot be attained and that precision in absolute numbers be considered. In such a case more adaptive management-observation systems may be needed. Also, if CV's of 20-30% for *individual* fishery species can be obtained and are needed for management, then this precision should be encouraged.

5.5 Other Factors That May Affect Observer Coverage Levels

Although the precision goals for estimating bycatch are important factors in determining observer coverage levels, other factors are also considered when determining actual coverage levels. These may result in either lower or higher levels of coverage than that required to achieve the precision goals for bycatch estimates.

Factors that may justify lower coverage levels include lack of adequate funding, incremental coverage costs that are disproportionately high compared to benefits and logistical considerations, such as lack of adequate accommodations on a vessel, unsafe conditions, and lack of cooperation by fishermen.

Factors that may justify higher coverage levels include incremental coverage benefits that are disproportionately high compared to costs and other management-focused objectives for observer programs. The latter include total catch monitoring, in-season management of total catch or bycatch, monitoring bycatch by species, monitoring compliance with fishing regulations, monitoring requirements associated with the granting of Experimental Fishery Permits, or monitoring the effectiveness of gear modifications or fishing strategies to reduce bycatch. In some cases, management may require one or even two observers to be deployed on every fishing trip (i.e., 100% coverage). Increased levels of coverage may also be desirable to minimize bias associated with monitoring rare events (such as takes of protected species), or to encourage the introduction of new "standard operating procedures" for the

industry that decrease bycatch or increase the ease with which it can be monitored.

6. Status of Bycatch Observation

6.1 A Survey of Observation Programs

The National Working Group on Bycatch (NWGB) reviewed a collection of fisheries to determine the level of existing bycatch monitoring. Each fishery was assigned a bycatch monitoring classification of: *None, Baseline, Pilot, Developing* and *Mature* as defined in Tables 4.1-4.6 (recognizing the precision goals established in Section 5).

First there should be an understanding of the list of fisheries used in Tables 4.1-4.6 and, thus, the definition of what is meant by the term "fishery". The definition of a fishery is inherently subjective (e.g. which gears are grouped), but in this context a "fishery" would be a logistically logical unit for which a sampling program might be designed. But, using this approach there are differences both within and between regions. This should be understood by the reader, particularly when interpreting summary statistics derived from Tables 4.1-4.6. For example, the fisheries of the Southeast (Tables 4.1-4.6) include a large number of relatively small coastal fisheries, as well as very large fisheries, such as the Gulf of Mexico shrimp trawl fishery. Thus, the implications of having or not having a bycatch monitoring program are clearly different between the Gulf shrimp trawl fishery and smaller coastal fisheries. This imbalance of implications occurs within all regions. To some extent this imbalance is addressed by assigning bycatch "vulnerabilities" to each fishery (this is done in Section 7). However, vulnerability does not address economic or political factors that one may wish to consider when developing bycatch programs. In any case, the reader should be aware of these issues when interpreting Tables 4.1-4.6.

Also, the reader should note that recreational fisheries are *not* included within Tables 4.1-4.6. Most of the private recreational and charterboat fisheries are monitored through the Marine Recreational Fishing Statistics Survey in which estimates of bycatch (discards) are made. Thus, in these recreational fisheries there currently *is* a bycatch reporting procedure, albeit based on self-reporting (with some of the problems inherent in self-reporting, noted in Section 4). Therefore, recreational fisheries were not included within Tables 4.1-4.6.

Additionally, some state fisheries were included if they were classified under MMPA guidelines and/or there were ESA concerns. Using this procedure the NWGB examined the status of each fishery (Tables 4.1-4.6).

Given the different emphasis placed on the fisheries examined in this report, it is important that the Regional Teams established in the National Bycatch Strategy review their constituent fisheries with the aim to identifying additional state, interstate jurisdictional fisheries and other recreational fisheries which might be important for bycatch monitoring.

Also, note that cost estimates were only made for those fisheries for which the "next step" is either a *Baseline* or *Pilot* monitoring program. In those cases there are entries in the columns of Tables 4.1-4.6 entitled "Number sea days needed to achieve next step to baseline or pilot". If the next step is a *Developing* or *Mature* program, then the entry in those columns is a dash (-). When no data were available, the entry is No Data Submitted.

Table 4.1. Survey of fishery-specific bycatch observation programs, enhancements and bycatch "vulnerability". See text for column definitions (Southwest region).

Fishery	Target Species	Gears	Current Design Classification (None, Baseline, Pilot, Developing or Mature)	Next Step in Design	Number sea days needed to achieve next step to baseline or pilot*	"Vulnerability" of Fishery to Fish Bycatch	"Vulnerability" of Fishery to Marine Mammal Bycatch	"Vulnerability" of Fishery to non-Marine Mammal ESA Bycatch and Seabirds
Southwest								
Coastal Pelagic Species (Coastwide)	Pacific sardine northern anchovy pacific mackerel jack mackerel market squid	Purse seine lampara net drum net	None	Pilot	130 days	Low	Moderate	Moderate
Drift Gillnet Fishery	Swordfish, sharks (thresher, mako)	Drift gillnet, large mesh	Mature	Maintain	-	Moderate	Moderate	High
Surface hook and line	Albacore	Troll	None	Baseline	420 days	Low	Low	Low
Pelagic longline	Swordfish, tuna	Single main line	Pilot	Developing	900 days to achieve precision goals	Moderate	Moderate	High
Coastal Purse Seine	Tuna	<400 tons	None	Pilot	15 days	Moderate	Moderate	Moderate
Harpoon	Swordfish	Harpoon	None	Baseline	15 days	Low	Low	Low

*Note that sea day estimates were only made for those fisheries for which the "next step" is either a *Baseline* or *Pilot* monitoring program. In those cases there are entries in the columns of Table 4 entitled "Number sea days needed to achieve next step to baseline or pilot" If the next step is a *Developing* or *Mature* program, then the entry in those columns is a dash (-). When no data were available, the entry is No Data Submitted.

Table 4.2. Survey of fishery-specific bycatch observation programs, enhancements and bycatch "vulnerability". See text for column definitions (Southeast region).

Fishery	Target Species	Gears	Current Design Classification (None, Baseline, Pilot, Developing or Mature)	Next Step in Design	Number sea days needed to achieve next step to baseline or pilot*	"Vulnerability" of Fishery to Fish Bycatch	"Vulnerability" of Fishery to Marine Mammal Bycatch	"Vulnerability" of Fishery to non-Marine Mammal ESA Bycatch and Seabirds
Southeast								
Gulf of Mexico Reef Fish FMP	42 species in FMP	Bottom longline	Baseline	Pilot	17 - 35 trips (490 days maximum)	High	Low	Moderate
South Atlantic snapper-grouper FMP	73 species in FMP	Bottom longline	Baseline	Pilot	4-8 trips (112 days maximum)	High	Low	Moderate
Gulf of Mexico Reef Fish FMP	42 species in FMP	Handline	Baseline	Pilot	60-120 trips (1,680 days maximum)	High	Low	Moderate
South Atlantic snapper-grouper FMP	73 species in FMP	Handline	Baseline	Pilot	79-138 trips (1,932 days maximum)	High	Low	Moderate
Migratory Coastal Pelagic FMP - Gulf of Mexico	King/Spanish mackerel	Trolling	None	Baseline	6-12 trips (168 days maximum)	Low	Low	Moderate
Migratory Coastal Pelagic FMP - South Atlantic	King/Spanish mackerel	Trolling	None	Baseline	45-90 trips (1,260 days maximum)	Low	Low	Moderate
Crab Trap/Pot (Stone Crab Fishery)	Stone crabs	Pot	None	Baseline	175-350 trips (350 days maximum)	Low	Low	Low
Crab Trap/Pot (Blue Crab Fishery) Gulf of Mexico	Blue crabs	Pot	None	Baseline	1,250-2,500 trips (2,500 days maximum)	Low	Moderate	Low

Fishery	Target Species	Gears	Current Design Classification (None, Baseline, Pilot, Developing or Mature)	Next Step in Design	Number sea days needed to achieve next step to baseline or pilot*	"Vulnerability" of Fishery to Fish Bycatch	"Vulnerability" of Fishery to Marine Mammal Bycatch	"Vulnerability" of Fishery to non-Marine Mammal ESA Bycatch and Seabirds
Southeast (cont.)								
Crab Trap/Pot (Blue Crab Fishery) South Atlantic	blue crabs	Pot	None	Baseline	600-1,200 trips (1,200 days maximum)	Low	Moderate	Low
Crab Trap/Pot (Golden Crab Fishery)	Golden crab	Pot	None	Baseline	1-2 trips (14 days maximum)	Low	Low	Low
Directed shark gillnet	Large coastal and small coastal shark aggregates	Drift gillnet/strike gillnet	Mature	Maintain	100% coverage of trips Nov-Mar, 38-50% of trips Apr-Oct	Moderate	Moderate	Moderate
South Atlantic snapper-grouper FMP	73 species in FMP	Trap	Baseline	Maintain	fishery being phased-out	High	Low	Low
Gulf of Mexico Reef Fish FMP	42 species in FMP	Trap	Baseline	Maintain	fishery being phased-out	High	Low	Low
Lobster Trap	Caribbean spiny lobster	Pot	None	Baseline	115-230 trips (230 days maximum)	Low	Low	Low
Gulf of Mexico - Shrimp Trawl	Brown, White, Pink Shrimp	Trawl	Pilot	Developing	8000 days for developing	High	Low	High
Southeastern Atlantic - Shrimp Trawl	Brown, White, Pink Shrimp, rock shrimp	Trawl	Pilot	Developing	4,000 days for developing	High	Low	Moderate
Fish Trawl (Paired / Single)	Butterfish, Squid	Trawl	None	Baseline	50 days maximum	Low	Low	Low

Fishery	Target Species	Gears	Current Design Classification (None, Baseline, Pilot, Developing or Mature)	Next Step in Design	Number sea days needed to achieve next step to baseline or pilot*	"Vulnerability" of Fishery to Fish Bycatch	"Vulnerability" of Fishery to Marine Mammal Bycatch	"Vulnerability" of Fishery to non-Marine Mammal ESA Bycatch and Seabirds
Southeast (cont.)								
Pelagic Longline Fishery	Tuna, swordfish	Surface longline	Developing	Mature	844 sets to achieve 20-30% CV goals: about 100% (501) of NED sets and about 3.6% (343) of other area sets; trips average about 2 sea days for every set made	High	High	High
Surface Trawl	Jelly fish	Trawl	None	Baseline	1 trip (7 days maximum)	Low	Low	Moderate
Inshore Gillnet	Bluefish, Spanish mackerel, weakfish, butterfish, southern flounder, spot, kingfish	Gillnet	Pilot	Developing	820 trips (820 days maximum)	Moderate	Moderate	High
NC Coastal Gillnet (state and federal waters)	Striped bass, monkfish, spot, croaker, bluefish, weakfish, Spanish mackerel, king mackerel, kingfish	Gillnet	Pilot	Developing	117 trips (117 days maximum)	Moderate	High	High
NC Pound-net	Southern Flounder	Pound net	Baseline	Pilot	66 trips (66 days maximum)	Low	Moderate	High
Southeastern Atlantic - Flynet	Croaker, Weakfish	Trawl	Baseline	Pilot	2-5 trips (35 days maximum)	Moderate	Low	Moderate
Atlantic Menhaden Purse-Seine Fishery	Atlantic menhaden	Purse seine	None	Baseline	25-50 sets (25 days maximum)	Low	Low	Low

Fishery	Target Species	Gears	Current Design Classification (None, Baseline, Pilot, Developing or Mature)	Next Step in Design	Number sea days needed to achieve next step to baseline or pilot*	"Vulnerability" of Fishery to Fish Bycatch	"Vulnerability" of Fishery to Marine Mammal Bycatch	"Vulnerability" of Fishery to non-Marine Mammal ESA Bycatch and Seabirds
Southeast (cont.)								
Gulf Menhaden Purse-Seine Fishery	Gulf menhaden	Purse seine	Baseline	Pilot	226-451 sets (226 days maximum)	Low	Moderate	Low
Gulf of Mexico - Cast Net (W. Florida)	Shrimp	Cast net	None	None	0 days maximum)	Low	Low	Low
Southeastern Atlantic - Cast Net (Florida, Georgia, North Carolina)	Brown, White, Pink and Other Marine Shrimp	Cast net	None	None	0 days maximum)	Low	Low	Low
Gulf of Mexico - Beam Trawl (Florida-West Coast) NMFS landing data.	Pink Shrimp	Beam trawl	Baseline	Baseline	75 trips (75 days maximum)	Low	Low	Low
Gulf of Mexico - Skimmer Trawls	Brown, White, Pink, Seabob and Other Marine Shrimp	Skimmer trawl	None	Baseline	219-438 trips (438 days maximum)	Low	Low	Low

Fishery	Target Species	Gears	Current Design Classification (None, Baseline, Pilot, Developing or Mature)	Next Step in Design	Number sea days needed to achieve next step to baseline or pilot*	"Vulnerability" of Fishery to Fish Bycatch	"Vulnerability" of Fishery to Marine Mammal Bycatch	"Vulnerability" of Fishery to non-Marine Mammal ESA Bycatch and Seabirds
Southeast (cont.)								
Southeastern Atlantic - Skimmer Trawls -	White Shrimp	Skimmer trawl	None	Baseline	18-36 trips (36 days maximum)	Low	Low	Low
Gulf of Mexico (All States) - Butterfly Nets	Brown, White, Pink, Seabob and Other Marine Shrimp	Butterfly net	None	Baseline	25-51 trips (51 days maximum)	Low	Low	Low
Southeastern Atlantic (NC, E FL) - Butterfly Nets	Brown, Pink and Other Marine Shrimp	Butterfly net	None	Baseline	3-6 trips (6 days maximum)	Low	Low	Low
NC Haul/Beach Seine	Striped bass, weakfish, spot, striped mullet	Multifilament seine; monofilament gillnet/seine	Baseline	Pilot	6-12 trips (12 days maximum)	Moderate	Moderate	Moderate
NC Long-Haul Seines	Spot, weakfish, Atlantic croaker	Seine	Baseline	Pilot	4-8 trips (8 days maximum)	Moderate	Moderate	Moderate
NC Stop nets	Striped Mullet	Multifilament anchored net and multifilament beach seine	Baseline	Pilot	100 days maximum	Moderate	Moderate	Moderate
Black Sea Bass Pot Fishery	Black sea bass	Pot/Traps	None	Baseline	50 days maximum	Moderate	Moderate	Low
Winter Fluke (Flounder) Trawls	Flounder	Trawls	Baseline	Pilot	7-13 trips (91 days maximum)	Moderate	Low	Moderate

*Note that sea day estimates were only made for those fisheries for which the "next step" is either a *Baseline* or *Pilot* monitoring program. In those cases there are entries in the columns of Table 4 entitled "Number sea days needed to achieve next step to baseline or pilot" If the next step is a *Developing* or *Mature* program, then the entry in those columns is a dash (-). When no data were available, the entry is No Data Submitted.

Table 4.3. Survey of fishery-specific bycatch observation programs, enhancements and bycatch "vulnerability". See text for column definitions (Northwest region).

Fishery	Target Species	Gears	Current Design Classification (None, Baseline, Pilot, Developing or Mature)	Next Step in Design	Number sea days needed to achieve next step to baseline or pilot*	"Vulnerability" of Fishery to Fish Bycatch	"Vulnerability" of Fishery to Marine Mammal Bycatch	"Vulnerability" of Fishery to non-Marine Mammal ESA Bycatch and Seabirds
Northwest								
West Coast Mid-Water Trawl for Whiting, At-Sea Processing	Pacific whiting	Pelagic trawl	Mature	Maintain	-	Moderate	Low	High
West Coast Mid-Water Trawl for Whiting, Shoreside Processing	Pacific whiting	Pelagic trawl	Pilot	Maintain	-	High	Low	High
West Coast Groundfish Bottom Trawl	Flatfish, rockfish, roundfish, assorted skates/sharks	Bottom trawl, large (>8" dia.) and small (<8") footrope	Developing	Mature	-	High	Low	Moderate
West Coast Groundfish Non-trawl Gear	Sablefish, rockfish, greenling, assorted roundfish	All non-trawl gear: hook-and-line, net gear, pot gear	Developing	Mature	-	High	Low	Low
West Coast Salmon Troll, Non-Tribal Ocean	Salmon	Troll hook-and-line gear	Baseline	Baseline	-	Moderate	Low	Low
West Coast Pacific Halibut Longline, Non-Tribal	Pacific halibut	Longline	None	Baseline	4	Moderate	Low	Low

*Note that cost estimates were only made for those fisheries for which the "next step" is either a *Baseline* or *Pilot* monitoring program. In those cases there are entries in the columns of Table 4 entitled "Number sea days needed to achieve next step to baseline or pilot" and "$ needed to achieve next step to baseline or pilot". If the next step is a *Developing* or *Mature* program, then the entry in those columns is a dash (-). When no data were available, the entry is No Data Submitted.

Table 4.4. Survey of fishery-specific bycatch observation programs, enhancements and bycatch "vulnerability". See text for column definitions (Alaska region).

Fishery	Target Species	Gears	Current Design Classification (None, Baseline, Pilot, Developing or Mature)	Next Step in Design	Number sea days needed to achieve next step to baseline or pilot*	"Vulnerability" of Fishery to Fish Bycatch	"Vulnerability" of Fishery to Marine Mammal Bycatch	"Vulnerability" of Fishery to non-Marine Mammal ESA Bycatch and Seabirds
Alaska								
Pacific Halibut Individual Fishing Quota	Pacific Halibut	Hook and Line (mainly longline)	None	Pilot	115	Moderate	Low	Moderate
BSAI Groundfish Trawl	Pollock, Pacific Cod, Flatfish, Rockfish, Atka Mackerel	Trawl	Developing	Mature	-	High	Moderate	Moderate
BSAI Groundfish Longline	Pacific Cod, flatfish, sablefish	Longline	Developing	Mature	-	Moderate	Low	Moderate
BSAI Groundfish Pot	Pacific Cod, Sablefish, Rockfish	Pot	Developing	Mature	-	Low	Low	Low
BSAI Groundfish Jig	Pacific cod, rockfish	Jig	None	Baseline	3	Low	Low	Low
GOA Groundfish Trawl	Pollock, Pacific Cod, Flatfish, Rockfish	Trawl	Developing	Mature	-	Moderate	Low	Moderate
GOA Groundfish Longline	Pacific Cod, Sablefish, Rockfish	Longline	Developing	Mature	-	Moderate	Low	Moderate
GOA Groundfish Pot	Pacific Cod	Pot	Developing	Mature	-	Low	Low	Low
GOA Groundfish Jig	Pacific Cod, Rockfish, Sablefish, Flatfish	Jig	None	Baseline	14	Low	Low	Low
Select State Managed Salmon	Salmon	Drift and Set Gillnet and Purse Seine	None-Baseline **	Baseline-Pilot **	>600	Low ***	Moderate	Low ***

*Note that sea day estimates were only made for those fisheries for which the "next step" is either a *Baseline* or *Pilot* monitoring program. In those cases there are entries in the columns of Table 4 entitled "Number sea days needed to achieve next step to baseline or pilot". If the next step is a *Developing* or *Mature* program, then the entry in those columns is a dash (-). When no data were available, the entry is No Data Submitted. **The current design classification and , therefore, the next step varies by area and gear. *** Note that, with one exception, controlling the bycatch of fish, non-marine mammal ESA species and seabirds in these state managed salmon fisheries is not a stewardship responsibility of NMFS. The exception is the bycatch of ESA listed Pacific Northwest salmon stocks. The Northwest Region has the lead for protecting those stocks.

Table 4.5. Survey of fishery-specific bycatch observation programs, enhancements and bycatch “vulnerability”. See text for column definitions (Northeast region).

Fishery	Target Species	Gears	Current Design Classification (None, Baseline, Pilot, Developing or Mature)	Next Step in Design	Number sea days needed to achieve next step to baseline or pilot*	"Vulnerability" of Fishery to Fish Bycatch	"Vulnerability" of Fishery to Marine Mammal Bycatch	"Vulnerability" of Fishery to non-Marine Mammal ESA Bycatch and Seabirds
Northeast								
New England Large Mesh Otter Trawl	Gadoids, Flatfish, Monkfish	Otter Trawl	Developing	Mature	-	Moderate	Low	Low
New England Small Mesh Otter Trawl	Gadoids Herring, Small Pelagics, Dogfish	Otter Trawl	Developing	Mature	-	Moderate	Low	Low
New England Gillnet	Gadoids, Flatfish, Dogfish	Demersal Gillnet	Developing	Mature	-	Moderate	High	Moderate
New England Demersal Longline	Gadoids, Dogfish	Longline	Baseline	Pilot	50	Moderate	Low	Low
Gulf of Maine Shrimp Trawl	Northern Shrimp	Otter Trawl	Baseline	Pilot	36	Moderate	Low	Low
Georges Bank Scallop Dredge	Sea Scallop	Mechanical Dredge	Developing	Mature	-	Moderate	Low	High
Mid-Atlantic Large Mesh Otter Trawl	Summer Flounder, Black Sea Bass, Scup	Otter Trawl	Developing	Mature	-	Moderate	Low	Moderate
Mid-Atlantic Small Mesh Otter Trawl	Squid, Mackerel, Butterfish		Pilot	Developing	-	Moderate	High	Moderate
Mid-Atlantic Longline	Tilefish,	Longline	Baseline	Pilot	50	Moderate	Low	Low
Mid-Atlantic Gillnet	Monkfish, Dogfish	Gillnet	Developing	Mature	-	Moderate	High	High

Fishery	Target Species	Gears	Current Design Classification (None, Baseline, Pilot, Developing or Mature)	Next Step in Design	Number sea days needed to achieve next step to baseline or pilot*	"Vulnerability" of Fishery to Fish Bycatch	"Vulnerability" of Fishery to Marine Mammal Bycatch	"Vulnerability" of Fishery to non-Marine Mammal ESA Bycatch and Seabirds
Northeast (cont)								
Mid-Atlantic/S. New England Small Pelagics	Herring, Mackerel	Midwater Trawl	Pilot	Developing	-	Low	Moderate	Moderate
Gulf of Maine Small Pelagics	Herring, Mackerel	Midwater Trawl	Baseline	Pilot	75	Low	Moderate	Moderate
Mid-Atlantic Scallop Dredge	Sea Scallop	Dredge	Developing	Mature	-	Moderate	Low	High
Lobster/Crab Trap	Lobster, Cancer Crab, Red Crab	Traps	None	Baseline	100	Low	High	Low
Other Pots	Cancer Crab, Red Crab, Whelk, Black Sea Bass	Traps	Baseline	Pilot	80	Low	Moderate	Low
Pound Nets	Croaker, Drum, Weakfish, Flounder	Fish Trap	Baseline	Pilot	40	Moderate	Moderate	Moderate
Weirs	Herring	Fish Trap	None	Baseline	30	Moderate	Moderate	Moderate
Hydraulic Dredge	Surf clams, ocean quohogs	Hydraulic Dredge	Baseline	Pilot	30	Low	Low	Low

*Note that sea day estimates were only made for those fisheries for which the "next step" is either a *Baseline* or *Pilot* monitoring program. In those cases there are entries in the columns of Table 4 entitled "Number sea days needed to achieve next step to baseline or pilot" If the next step is a *Developing* or *Mature* program, then the entry in those columns is a dash (-). When no data were available, the entry is No Data Submitted.

Table 4.6. Survey of fishery-specific bycatch observation programs, enhancements and bycatch "vulnerability". See text for column definitions (Pacific Islands region).

Fishery	Target Species	Gears	Current Design Classification (None, Baseline, Pilot, Developing or Mature)	Next Step in Design	Number sea days needed to achieve next step to baseline or pilot*	"Vulnerability" of Fishery to Fish Bycatch	"Vulnerability" of Fishery to Marine Mammal Bycatch	"Vulnerability" of Fishery to non-Marine Mammal ESA Bycatch and Seabirds
Pacific Islands								
Pelagic Longline	Tuna, mahimahi, other	Longline	Developing	Mature	-	Moderate	Moderate	High
Pelagic Hook-and-Line (Rod and Reel)	Tuna, mahimahi, other	Hook and line	None	Baseline	No Data Submitted	Low	Low	Low
Pelagic Handline	Tuna, mahimahi, other	Handline	None	Baseline	No Data Submitted	Low	Low	Low
NWHI Crustaceans	Spiny and slipper lobster	Traps	Baseline	Pilot	No Data Submitted	Moderate	Moderate	Low
NWHI Bottomfish	Snapper, carangids	Handline	None	Pilot	No Data Submitted	Moderate	Moderate	Low
Pelagic Purse Seine	Tuna	Purse Seine	Mature	Maintain	-	Moderate	Low	Moderate
Precious Corals	Stony corals	Tangle Nets	None	Baseline	No Data Submitted	Low	Low	Low

*Note that sea day estimates were only made for those fisheries for which the "next step" is either a *Baseline* or *Pilot* monitoring program. In those cases there are entries in the columns of Table 4 entitled "Number sea days needed to achieve next step to baseline or pilot" If the next step is a *Developing* or *Mature* program, then the entry in those columns is a dash (-). When no data were available, the entry is No Data Submitted.

Table 5. Frequency and percent of observation programs in Tables 4.1-4.6 (observation programs definitions given in Table 3)

Current Observation Program	Frequency					
	# Fisheries	# None	# Baseline	# Pilot	# Developing	# Mature
Southwest	6	4	0	1	0	1
Southeast	37	17	14	4	1	1
Northwest	6	1	1	1	2	1
Alaska	10	3	1	0	6	0
Northeast	18	2	7	2	7	0
Pacific Islands	7	4	1	0	1	1
Total	84	31	24	8	17	4
	Percent					
Current Observation Program	Fisheries	None	Baseline	Pilot	Developing	Mature
Southwest	100%	67%	0%	17%	0%	17%
Southeast	100%	46%	38%	11%	3%	3%
Northwest	100%	17%	17%	17%	33%	17%
Alaska	100%	30%	10%	0%	60%	0%
Northeast	100%	11%	39%	11%	39%	0%
Pacific Islands	100%	57%	14%	0%	14%	14%
Total	100%	37%	29%	10%	20%	5%

A total of 84 fisheries were classified in Tables 4.1-4.6. Of these, 5% have a *Mature* observation program, 20% were *Developing* (25% were either *Mature* or *Developing*), 10% have a *Pilot* program, 29% have a *Baseline* program and 37% do not have a program (*None*). The summary statistics are in Table 5.

Be reminded again of the discussion in Section 6.1 about what a "fishery" is: there are differences both within and between regions. This should be understood by the reader, particularly when interpreting the above statistics.

6.2 Enhancement of Observation Programs

6.2.1 Criteria for Enhancing Observations

The previous Section (Section 5) presented a discussion of precision goals. It was noted there that the goals are levels of precision to which we strive to achieve, but it is important to recognize that:

- there are intermediate steps in increasing precision which may not immediately achieve the goals;

- there are circumstances in which higher levels of precision may be desired, particularly when management is needed on fine spatial or temporal scales; and

- there are circumstances when the precision goal may not be the most efficient use of public resources and that lower precision levels are acceptable; however, in this latter case a decision to accept lower precision should be based on analyses and understanding of the implications of that decisions.

Given this understanding, the National Working Group on Bycatch (NWGB) used the following

procedure for examining options for enhanced observation programs.

The NWGB reviewed each fishery and determined the "next step" of sampling program development needed (see Table 4), i.e., moving from *None* to a *Baseline* or *Pilot* program, moving from a *Baseline* to a *Pilot* program, moving from a *Pilot* to a *Developing* program and moving from a *Developing* to *Mature* program. In a few instances it is suggested that the sampling program be maintained (for example, for some Mature sampling programs or for fisheries that are being phased out). The NWGB could not make quantitative, fishery by fishery, sampling recommendations for pilot, developing and mature programs. Data exist to do this, but time and expertise for these analyses did not reside within the NWGB. Additionally, developing or mature sampling programs imply optimization of sampling which, in turn, depends on budget constraints and precision goals. This sampling plan and optimization process should be done for each of the developing and mature sampling programs.

Additionally, initial effort should be made to establish baseline or pilot-level information for every fishery such that statistically rigorous sampling plans can be developed. At this stage it is not expected that all fisheries will achieve the 20-30% precision goals, but rather that information will become available to both plan for the attainment of those goals and to do it in an efficient manner. The information may be used to identify the cost of achieving the precision goal. In developing quantitative advice for coverage of observation programs, the guidance of the Atlantic States Marine Fisheries Commission's (ASMFC) Atlantic Coastal Cooperative Statistics Program was noted: *observer programs should obtain a minimum of 2% coverage until CV can be calculated, and then target 20-30% CV for both finfish and protected species (ASMFC, 1997). The programs should utilize proportional sampling across all gear types and fisheries, recognizing some prioritization as need (statutory requirements) and data (high bycatch areas) dictate.* Recognizing the importance of evaluating sampling programs through intermediate steps, the NWGB suggests the following sampling criteria for each fishery (Table 6).

Table 6. Sampling criteria for enhanced observation programs.

From: Current Program	To: Enhanced Program	Improvement Criteria
None	Baseline	***0.5-1% coverage of total effort preferably distributed across initial time/area/gear strata. There should be a minimum sample size of three per strata. Maximum sample sizes for Baseline and Pilot programs should be 100 per strata until quantitative designs can be developed.*** Focus on definition of relevant strata and the determination of the likelihood of a bycatch problem. Recommend uniform sampling allocation.
None	Pilot	***0.5-2% coverage of total effort distributed across refined time/area/gear/vessel strata. There should be a minimum sample size of three per strata. Maximum sample sizes for Baseline and Pilot programs should be 100 per strata until quantitative designs can be developed.*** Recommend uniform allocation or alternative more efficient allocations (e.g. proportional allocations) based on available data. This approach to skip baseline would be for fisheries where a perceived bycatch problem has been noted from non-systematic observation.
Baseline	Pilot	***1-2% coverage of total effort distributed across refined time/area/gear/vessel strata. There should be a minimum sample size of three per strata. Maximum sample sizes for Baseline and Pilot programs should be 100 per strata until quantitative designs can be developed.*** Recommend uniform allocation or alternative more efficient allocations (e.g. proportional allocations) based on available data.
Pilot	Developing	Stratified random designs have been established and optimal sampling allocations are developed, implemented and evaluated. Strategy for meeting recommended precision goals is established
Developing	Mature	An optimal sampling allocation scheme has been implemented. It is periodically re-evaluated considering changes in the fishery over time. Precision goals are being met.

Percent coverage levels were put into the criteria to move the programs up through the initial stages of the process, but were purposely not suggested for the more advanced stages. In the initial expansion of any sampling program a certain level of coverage must be established to determine the next developmental steps in the process. Using the coverage level standards developed by the Atlantic Coast Cooperative Statistics Program (ACCSP), it was determined that a 2% coverage level would allow each of the programs to develop up to the pilot stage of sampling. It was felt that this level of coverage would allow enough data to be collected that coverage levels and stratification designs could be developed to move the programs up through the more advanced sampling levels. However, for fisheries with a large amount of effort (a large number of vessel-sea days), a simple 0.5-2% rule would be exorbitantly expensive and statistically wasteful. Therefore, it is recommended that in the Baseline and Pilot stages of a program that sample sizes not exceed 100 per strata or an overall coverage of 0.5-2%, whichever is smaller. This sampling level would allow initial evaluation and planning to occur

for developing and mature observation stages. Sampling would then either increase or decrease depending on the design characteristics chosen.

Fixed or recommended percent coverage levels for the advanced stages are not appropriate, since the amount and allocation of the coverage levels are developed by statistical methodologies and will differ from fishery to fishery and region to region. A fishery with a few abundant, but evenly distributed, bycatch species will have a very different sampling design than a fishery with many uncommon, patchily distributed bycatch species. At the mature stage of development the two programs will have very different percentage levels of coverage.

6.2.2 Enhanced Sample Sizes and Costs

Of the fisheries reviewed in Tables 4.1-4.6, 60% were suggested as candidates for "next step" improvement to a Baseline or Pilot sampling program. Using the quantitative sampling criteria of Table 6, estimates were made of the number of observed sea days (observed trips or observed participants) that are needed to move sampling programs from None to Baseline or None to Pilot.

Estimates of cost per observation day are quite variable between fisheries and between regions. Estimates vary from $450 to $2000 per observation day (at-sea day). The reasons for the variation include: logistical difficulties for observers to join trips (lengthy travel, onshore travel costs), insurance, food, data entry, quality control, training, analytical costs and program management. Differences in these factors arise from differences in who pays for these various costs, whether the program is large enough for economies of scale and the geography of the fishery.

Cost estimates for Baseline and Pilot observation programs were not made. Cost estimates to establish baseline or pilot-level information for all fisheries can be made, based on knowledge of the fisheries. Additionally, costs associated with developing and mature programs may be obtained. It is foreseeable that sampling programs that are in advanced stages could call for either more or less sampling coverage when optimized for changing budgets and/or precision goals. However, it is expected that in general more precision (and, thus, larger budgets) will be required.

7. Vulnerability of Fisheries to Adverse Impacts of Bycatch

Categories of "vulnerability" to adverse impacts on bycatch species that exists or might arise in the future were assigned to each fishery. The assignment was designed to provide guidance for priority-setting in developing strategies for addressing bycatch issues. Vulnerability criteria might include such factors as the degree of overfishing of target species, life history characteristics of target and bycatch species and the spatial-temporal patterns of the bycatch and target species.

When examining the impact of fishing on a species or stock, the metric that is most often used in fisheries is the Spawning Potential Ratio (SPR), i.e., the contribution to reproductive potential of a cohort of animals over its lifetime when undergoing fishing relative to that contribution when no fishing is occurring. In order to calculate SPR, one needs age-specific rates of natural mortality, fishing mortality, fecundity and growth. Typically, fishing mortality rates which result in an SPR of 40% are approximations of the fishery mortality rate at maximum sustainable yield. When examining bycatch impacts on a species-stock, the SPR concept may be expanded to look at the reproductive potential (1) when there is bycatch mortality and no target fishing relative to when there is neither bycatch nor target fishing; (2) when there is both bycatch and target fishing relative to no fishing; and (3) when there is both bycatch and target fishing relative to when there is just target fishing. The first calculation (1) examines the risk to the population of bycatch alone; the second (2) looks at the total risk to the population under all fishing mortality; and the third addresses the relative, incremental risk imposed by bycatch beyond that of the target fisheries. Ideally, these calculations should be made for every bycatch species within a fishery and then fisheries could be assigned vulnerability based on those risks. For example, bycatch of species *x* might be assigned high vulnerability if SPR with both target and bycatch fishing was below 40%, or if SPR with bycatch alone was reduced to, say, 50%. The results by species-stock could be grouped in categories within a fishery to assign vulnerability to the fishery as a whole.

However, the number of species for which this can be done is often limited due to the lack of data. Therefore, a more qualitative approach was used here. Each fishery was assigned a "vulnerability" of high, moderate, or low for bycatch of the fishery resources, for the bycatch of marine mammals and for the bycatch for other protected species. No attempt was made to weight vulnerability among the three resource types. [Note that the "other protected species" category was defined to include migratory seabirds as well as endangered species because the vulnerability issues are similar. Also, endangered and threatened marine mammals were included in the marine mammal category, rather than the "other protected species" category since regulatory procedures for both types of marine mammals are defined similarly.] The criteria used to define ***High***, ***Moderate*** and ***Low*** vulnerability for these three resource groups are presented below.

7.1 Vulnerability Criteria for Fishery Resources

Regional experts within NMFS were polled and asked to address five questions for *each* of the fisheries listed in Table 6 within their region:

> Does uncertainty in bycatch estimates contribute in an important way to application of management constraints such as TACs, PBRs, days at sea, the minimum stock size threshold (MSST), the maximum fishing mortality rate threshold (MFMT), etc.? For example, if bycatch is a large proportion of the total catch, and/or if the precision of the inputs to stock assessment models is much better than that of the bycatch, then uncertainty contributes in an important way;
>
> Is there a high discard or bycatch rate or amount relative to total catch? Indicate whether this is

a current management concern due to the absolute amount of discard or rate;

Does the bycatch of this fishery cause significant mortality of any species listed as overfished? For example, if the mortality affects an overfished species' rebuilding schedule, then the mortality is significant;

Are the target species of this fishery undergoing overfishing or overfished?

Does the bycatch impact other fishery allocations? For example, do levels of bycatch taken in the fishery result in lower catch limits, closures, etc. in other fisheries or sectors?

The experts were also asked to provide their own overall rating for the fishery and to provide comments on the reasons for that rating. The five questions were designed to address risks to the bycatch species taken in the fishery, risks to target species of the fishery, constraints on management imposed by uncertainty in the bycatch and allocation impacts imposed on other fisheries. Answers to these questions were grouped according to the number of positive responses and were compared to the overall judgement on vulnerability of the fishery by the regional expert. Fisheries were assigned ***High***, ***Moderate*** and ***Low*** vulnerability based on the number of affirmative responses to the five questions.

7.2 Vulnerability Criteria for Marine Mammals

Vulnerability criteria for marine mammals in individual fisheries have already been established through the MMPA regulatory process. Vulnerability of marine mammals due to mortality and serious injury incidental to fisheries follows the fishery classification scheme for fisheries resulting in frequent bycatch, occasional bycatch, and a remote likelihood of marine mammal bycatch established by the MMPA (16 U.S.C. 1387 (c)(1)(A)) and codified in regulations at 50 CFR 229.2.

The ranking of marine mammal vulnerability in a particular fishery depends on the listing of that fishery in the annual List of Fisheries, and specifically, the level of takes the fishery causes relative to a marine mammal stock's potential biological removal level (PBR). A Category I fishery is one that results in frequent incidental mortality and serious injury of marine mammals and by itself is responsible for the annual removal of 50% or more of any stock's PBR level. A Category II fishery is one that results in occasional incidental mortality and serious injury of marine mammals. A Category II fishery, collectively with other fisheries, is responsible for the annual removal of more than 10% of any marine mammal stock's PBR and by itself responsible for the annual removal of between 1 and 50% of any stock's PBR. A Category III fishery is one that has a remote likelihood or no known incidental mortality and serious injury of marine mammals and that collectively with other fisheries is responsible for (a) the annual removal of 10% or less of any marine mammal stock's PBR, or (b) by itself is responsible for the annual removal of 1% or less of any marine mammal stock's PBR. The Category of a fishery which takes marine mammals is based upon a procedure that is analogous to the SPR metric mentioned above, except that usually there is no targeted take of marine mammals.

Thus, the Category of a fishery was the basis for assigning vulnerability: Category I fisheries were assigned *High* vulnerability, Category II fisheries were assigned *Moderate* vulnerability and Category III fisheries were assigned *Low* vulnerability. Additionally, fisheries that NMFS is evaluating with respect to a Category II classification, but that are currently listed as Category III, were assigned *Moderate* vulnerability in this report.

7.3 Vulnerability Criteria for Other Protected Species, Including Seabirds

The vulnerability of other protected species (other than marine mammals but including seabirds) in individual fisheries was assigned based upon the relative seriousness of the impact of bycatch on the species' recovery.

Where authorization of the fishery required a formal Section 7 consultation and the result of the Biological Opinion was a jeopardy finding within the last 3-5 years, or where the Biological Opinion has been challenged and is being reevaluated by NMFS (e.g., New England scallop fishery), vulnerability of non-marine mammal ESA-listed species was rated *High* for that fishery. Where authorization of the fishery required a formal Section 7 consultation but the result of the Biological Opinion was No Jeopardy and an incidental take statement exists and is in compliance, vulnerability of non-marine mammal ESA-listed species was rated *Moderate* for that fishery. Where authorization of a fishery did not require formal consultation and no incidental take statement was needed, vulnerability of non-marine mammal ESA-listed species was rated as *Low* for that fishery. Since many vulnerability issues for seabirds are similar to endangered species, they were grouped within this classification.

7.4 Bycatch Vulnerability of Fisheries

Vulnerability classifications for each fishery are given in Table 4 and summarized in Table 7:

- 1% of these fisheries are rated as having a *High* vulnerability for bycatch of all three resource types (fishery resources, marine mammals or endangered species including seabirds);
- 6% of these fisheries are rated *High* for bycatch of two or more of the three resource types;
- 31% of these fisheries are rated *High* for bycatch of one or more of the three resource types (thus, 69% are rated *Moderate* or *Low* for all three resources);
- 6% of these fisheries are rated *High* for bycatch of one or more of the three resource types *AND* have a suggested "next step" sampling program of baseline or pilot;
- 15% of these fisheries are rated *High* for bycatch of fishery resources (85% are rated *Moderate* or *Low*);
- 7% of these fisheries are rated *High* for bycatch of marine mammals (93% are rated *Moderate* or *Low*);
- 15% of these fisheries are rated *High* for bycatch of endangered species including seabirds (85% are rated *Moderate* or *Low*);
- 26% of these fisheries are rated as having a *Low* vulnerability for bycatch for all three resource types;

Table 7. Frequency summary of vulnerability classifications

Vulnerability	Frequency								
	No. Fisheries	High Fish	High MM	High ES+B	High in 1 or more	High in 2 or 3	High in All 3	Low in All 3	High in 1 or more AND next step program is baseline or pilot
Southwest	6	0	0	2	2	0	0	2	0
Southeast	37	9	2	5	12	3	1	12	5
Northwest	6	3	0	2	4	1	0	0	0
Alaska	10	1	0	0	1	0	0	4	0
Northeast	18	0	4	3	6	1	0	1	0
Pacific Islands	7	0	0	1	1	0	0	3	0
Total	84	13	6	13	26	5	1	22	5

8. Strategies to Address Bycatch

As always, defining a procedure to address a problem requires that the problem, itself, be defined. Therefore, the best mechanisms to address bycatch problems in a particular fishery will depend on fishery-specific factors including: the nature and source of the bycatch problem being addressed, the information required and available to effectively and efficiently implement a solution, and the expected net benefits.

8.1 The Nature and Source of the Bycatch Problem

Bycatch mortality can decrease the sustainability of a fishery and the net benefits provided by that fishery. It can do this in four ways. First, if bycatch mortality is not monitored adequately, it increases the uncertainty concerning total fishing-related mortality, which in turn makes it more difficult to assess the status of stocks of fish and other bycatch species, to set the appropriate optimum yield and overfishing levels for fish stock, to determine acceptable levels of bycatch for other bycatch species, and to ensure that the optimum yields are attained, that overfishing does not occur and that the acceptable levels of bycatch for other species are not exceeded. Second, if discards are sufficiently concentrated in time and space, they will result in localized environmental degradation. Third, bycatch mortality precludes some other uses of living marine resources. For example, juvenile fish that are subject to bycatch mortality cannot be used to contribute directly to the growth of that stock and to future catch. Nor can they be available as prey for depleted stocks and other species. Bycatch is a wasteful use of living marine resources if it precludes a higher valued use of those resources. Fourth, in the absence of management measures designed to reduce bycatch, there will typically be too much bycatch; however, without adequate information concerning the biological, ecological, social, and economic effects of a set of bycatch management measures, the measures can be ineffective and inefficient. In some cases, the measures will be too restrictive and actually decrease the net benefits derived by the Nation from the use of living marine resources. That is, without adequate information, there is a higher probability that the solution to the bycatch problem will be more severe than the problem itself.

If the problem is due principally to uncertainty concerning fishing related mortality, improved bycatch monitoring systems should be considered and may be sufficient to solve the bycatch problem. A strategy for developing an adequate bycatch monitoring program is to progress, as necessary, from the current program to a mature bycatch monitoring program. For some fisheries the progression would be from basically no independent at-sea observations of fishing operations, to a baseline program, to a pilot program, to a developing program, and finally to a mature at-sea monitoring program.

At each level, the monitoring program could rely on at-sea observers, electronic monitoring, or a combination of the two. The best mix of these two methods for independent at-sea observations will vary by fishery, by the bycatch species of most concern, and over time. The information provided by each type of program will be used in determining if it is appropriate to implement a more extensive monitoring program, the priority for doing so, and the nature of the enhancements that should be made when enhancements are necessary. Due both to changes in circumstances in fisheries and technological progress in monitoring methods, a periodic review of the monitoring program will be required to identify the appropriate changes.

In some cases, a less extensive program may demonstrate that the bycatch problems in a fishery are minimal and do not justify the progression to a mature monitoring program. In some other cases, the initial monitoring program may demonstrate that there is a substantial bycatch problem, that

the cost of a mature monitoring program would be prohibitive, but that there are relatively low cost methods for substantially reducing bycatch. This could occur if the bycatch of a species of concern is a very rare event and the effectiveness of the bycatch reduction methods are expected to be similar for the very rare species and some species that are more easily monitored. In other cases, an initial monitoring program may provide information that would justify a rapid progression to a mature monitoring program.

If the problem is principally localized environmental degradation, it may be possible to solve the problem effectively and efficiently by controlling the temporal and spacial distribution of discards.

If the problem is excessive human induced mortality for a particular stock and there are several sources of that mortality, the merits of reducing the alternative sources of mortality should be considered. For example, in the case of overfishing, the solution could be to decrease the catch or bycatch of that stock or both. The appropriate choice, will depend on the marginal net benefit of each of these two uses of the stock that is being overfished.

If it is determined that there is too much bycatch in a fishery, there are two general types of solutions. Regulations can be developed and implemented that prohibit fishermen from fishing in ways that result in too much bycatch. For example, regulations can prohibit fishing in specific times or areas, they can require the use of specific gear or gear modifications, and they can restrict the use of catch or the level of bycatch. Alternatively, regulations can be developed and implemented to eliminate or decrease incentives (i.e., externalities) that result in fishermen taking too much bycatch. Typically, much of the benefit of reducing bycatch accrues to others, not to the fisherman who modifies his fishing practices to decrease bycatch. The benefits others receive are external to the fisherman's decision making process; therefore, from society's perspective, the fisherman does not do enough to reduce bycatch. The externalities are the source of the excess bycatch problem, and in some cases decreasing the externalities will be the appropriate solution. But that will require holding individual fishermen accountable for their bycatch, and the monitoring required to do that may not be feasible.

The MSA specifies that bycatch be minimized *to the extent practicable* . Generally, there will be some practical limitations on how much bycatch can be reduced within feasible fishery operating procedures. There may be uncertainty or a misunderstanding concerning the extent to which it is practicable to reduce bycatch. Thus, in these instances there needs to be a full and complete public debate of the options and ramifications of bycatch reduction including research and outreach programs that decrease the uncertainty and increase the general understanding of the effects of specific methods of decreasing bycatch.

8.2 Information Needed to Implement an Effective and Efficient Solution to the Bycatch Problem for the Fishery

With sufficient information, fishery managers could identify the best way for each fishing operation to decrease its bycatch. The difficulty is that fishery managers have relatively limited and usually static information. Individual fishermen usually have more complete and more timely information concerning methods for decreasing bycatch, but as noted above, they may lack the appropriate incentives. In selecting the management approach that will be used to decrease bycatch, it is important to be realistic about information deficiencies and the difficulty of providing the correct incentives to fishermen. Research concerning the response of fish and other bycatch species to fishing gear and fishing operations can assist in developing effective and efficient methods for reducing bycatch and bycatch mortality. Such research is also necessary to determine the extent to which a change in gear or fishing practices decreases bycatch as opposed to, for example, just replacing discard mortality with

unobserved fishing mortality.

8.3 Expected Net Benefits

Although the information required to precisely estimate the net benefits of alternative solutions will seldom be available, an effort should be made to consider both the benefits and costs of the alternative strategies, where the benefits and costs are broadly defined to address the biological, ecological, social, and economic effects of bycatch and bycatch management. Such an approach is required for good stewardship and to meet federal regulatory mandates, including those in the MSA, the MMPA, the ESA, the National Environmental Policy Act, the Regulatory Flexibility Act, and Executive Order 12866. Outreach and public debate to obtain information concerning the benefits and costs of the alternatives can be done through the Council and NMFS processes which may be used to develop and evaluate alternatives. In general, more complete information concerning the biological, ecological, social, and economic effects of bycatch and methods for reducing bycatch are required to develop more effective and efficient methods for managing bycatch. As more efficient methods for reducing bycatch are developed, further reductions in bycatch will become practicable.

8.4 Setting National Priorities for Improving Bycatch Monitoring

The Magnuson-Stevens Act requires a *standardized reporting methodology* for bycatch. There are a variety of standardized methodologies that can be used to meet this requirement. As noted in previous sections, there are tradeoffs between the quality of the bycatch estimates and the bycatch monitoring costs either when choosing among methodologies or when choosing sample sizes. The cost of improving the quality of the bycatch estimates will decrease as the methodologies are improved. For example, such improvements will result from improving either sample designs or observation technologies. However, the tradeoffs will remain and for each fishery the appropriate choice between the cost and quality of bycatch estimates will depend on the importance of improving the quality of the estimates. That will be determined by a variety of factors. For example, if the expected level of bycatch is very low compared to other sources of fishing mortality and if the populations of the bycatch species are healthy, a low cost reporting methodology which provides estimates with low precision may be appropriate. Conversely, if bycatch is thought to account for a large part of the fishing mortality of a species that is overfished, better bycatch estimates and higher bycatch monitoring costs are justified.

Typically, the recommended precision goals for bycatch estimates cannot be met without an at-sea observation program. In most cases with the current technologies, such programs will include at-sea observers. Therefore, this section focuses on setting priorities for implementing and improving observer programs.

There are no observer programs for 37% of the fisheries in Table 4. However, few of these fisheries have been classified as having a high bycatch vulnerability of one or more of the three types of bycatch species (fish, marine mammals and other protected species, including seabirds). These few fisheries are high priority candidates for Baseline or Pilot at-sea observation programs.

Fisheries which have bycatch vulnerability rated as High for one or more of the three types of bycatch are high priority candidates for additional funding to improve the observer programs. There are 26 such fisheries in Table 4 (2 in the Southwest, 12 in the Southeast, 4 in the Northwest, 1 in Alaska, 6 in the Northeast and 1 in the Pacific Islands). Estimates of sampling requirements needed to maintain or bring these fisheries up to the required precision goals in Developing and Mature programs have not been made for all of the fisheries.

The remaining fisheries in Table 4 have a bycatch vulnerability rating of Low or Moderate for all three types of bycatch. The observer programs for these fisheries include some with None, some with Baseline and some with Developing programs. These fisheries are lower priority candidates for either implementing an observer program or improving the existing program. There are 58 such fisheries in Table 4. Since these remaining fisheries have bycatch ratings of only Low or Moderate vulnerability, the Baseline or Pilot programs could be conducted using an annual rotation (perhaps, three-year) unless results indicated that more mature sampling programs should be developed.

As at-sea observation programs are implemented and improved, it may become clearer that there are minor bycatch problems in some fisheries and unexpectedly severe bycatch problems in other fisheries. In the latter case, the development of effective and efficient actions to decrease bycatch may require more extensive programs than are required to meet the recommended precision goals for bycatch estimates.

9. Literature Cited

Alaska Fisheries Science Center. 2003. North Pacific Groundfish Observer Manual. North Pacific Groundfish Observer Program. AFSC, 7600 Sand Point Way N.E., Seattle, Washington, 98155.

Atlantic States Marine Fisheries Commission. 1997. Workshop on Bycatch Data Collection: Developing an Atlantic Coast Bycatch Monitoring Program. Final Report for NOAA Grant NA67 FMO 475. 69 p.

Barlow, J. 1999. Strategies for the statistical monitoring of fishery bycatch. In: Development of a Process for the Long-term Monitoring of MMPA Category I and II Commercial Fisheries, edited by A. Didier and V. Cornish, NOAA Technical Memorandum NMFS-OPR-14. p. 9-11.

Credle, V.R. 1993. "Is-Self Reporting of Marine Mammal Interactions a Useful Management Tool?" Abstract in Proceedings of Tenth Biennial Conference on the Biology of Marine Mammals, Galveston, TX, November 11-15, 1993. p. 38.

Didier, A.J. Jr., and V.R. Cornish (eds.). 1999. Development of a process for the long-term monitoring of MMPA Category I and II commercial fisheries. Proceedings of a workshop held in Silver Spring, Maryland, 15-16 June 1998. U.S. Dep. Commerce, NOAA Tech. Memo. NMFS-OPR-14, 46 p.

Epperly, S.P., J. Braun, A.J. Chester, F.A. Cross, J.V. Merriner, P.A. Tester, and J.H. Churchill. 1996. Beach strandings as indicators of at-sea mortality of sea turtles. Bulletin of Marine Science, 59(2): 289-297.

Fadely, B. 1999. Qualitative or reduced monitoring methods. In: Development of a Process for the Long-term Monitoring of MMPA Category I and II Commercial Fisheries, edited by A. Didier and V. Cornish, NOAA Technical Memorandum NMFS-OPR-14. p. 22-23.

Fisheries Information Services. 2002. Discards in the Groundfish Fisheries of the Bering Sea/Aleutian Islands and the Gulf of Alaska, 1998-2000. Prepared for the State of Alaska Department of Fish and Game. Fisheries Information Service, Juneau, AK. Available at: http://www.cf.adfg.state.ak.us/geninfo/pubs/98_00discard/98_00discard_p1.pdf. 54 p.

Fox, D.S. and Starr, R.M. 1996. Comparison of commercial and research catch data. *Canadian Journal of Fisheries and Aquatic Sciences* 53:2681-2694.

Gabriel, W. and M. Fogarty. In press. Relative Precision of Discard Estimates for the Northeast Groundfish Complex.

Geernaert, T.O., H. Gilroy, S. Kaimmer, G. Williams, and R. Trumble. 2001. A Feasibility Study that Investigates Options for Monitoring Bycatch of the Short-Tailed Albatross in the Pacific Halibut Fishery off Alaska. Prepared for the National Marine Fisheries Service by the Staff of the International Pacific Halibut Commission. 59 p.

Guillory, V., A. McMillen-Jackson, L. Hartman, H. Perry, T. Floyd, T. Wagner, and G. Graham. 2001. Blue Crab Derelict Traps and Trap Removal Programs. Gulf States Marine Fisheries Commission, Ocean Springs, MS, 13 p.

Hall, M.A. 1999. Estimating the ecological impacts of bycatches: what data are needed to estimate bycatches? In: Proceedings of the International Conference on Integrated Fisheries Monitoring, Sydney, Australia, 1-5 February 1999. FAO, Rome. p. 175-184.

Hoag, S. H. 1975. Survival of halibut released after capture by trawls. Int. Pac. Halibut Comm. Sci. Rpt. 57. 18 p.

Hohn, A., Mase, B., Litz, J., McFee, W., and Zoodsma, B. 2001. Characterization of human-caused strandings of bottlenose dolphins along the Atlantic Coast from South Carolina to Southern Florida, 1997 – 2000. Draft paper prepared for the Bottlenose Dolphin Take Reduction Team.

Ianelli, J.J., Lauth, R. and Jacobson, L.D. 1994. Status of the thorny-head (*Sebastolobus* sp.) resource in 1994. In: Appendices to the status of the Pacific coast groundfish fishery through 1994 and recommended acceptable biological catches for 1995. Pacific Fishery Management Council, Metro Center, Suite 420, 2000 SW First Avenue, Portland, OR 97201, U.S.A. pp. D-1 – D-58.

IPHC 2003. Area 2A Sport Halibut Seasons at-a-glance. www.iphc.washington.edu.halcom.sport/2asportglance.htm

Mayo, R.K., A.M. Lange, S.A. Murawski, M.P. Sissenwine, and B.E. Brown. 1981. Estimation of discards in mixed trawl fisheries off the Northeast Coast of the United States, based on bottom trawl survey catches. NEFSC Lab. Ref. Doc. 81-18.

Mayo, R.K., L. O'Brien, and N. Buxton. 1992. Discard estimates of American plaice *Hippoglossoides platessoides*, in the Gulf of Maine Northern Shrimp Fishery and the Gulf of Maine-Georges Bank Large-mesh otter trawl fishery. SAW Res. Doc. 14/3

Methot, R., Lauth, R., Shaw, F. and Wilkins, M. 1994. Assessment of the west coast sablefish stock in 1994. In: Appendices to the status of the Pacific coast groundfish fishery through 1994 and recommended acceptable biological catches for 1995. Pacific Fishery Management Council, Metro Center, Suite 420, 2000 SW First Avenue, Portland, OR 97201, U.S.A. pp. B-1 – B-87.

Murawski, S. A., R. Brown, H. L. Lai, P. J. Rago, and L. Hendrickson. 2000. Large-scale closed areas as a fishery-management tool in temperate marine systems: The Georges Bank experience. *Bulletin of Marine Science* 66:775–98.

National Marine Fisheries Service. 1998a. Managing the nation's bycatch: priorities, programs and actions for the National marine Fisheries Service. National Marine Fisheries Service, 192 p.

National Marine Fisheries Service. 1998b. Report to Congress on the Proposed Implementation of a Fishing Vessel Registration and Fisheries Information System. Submitted to the Committee on Resources of the House of Representatives and the Committee on Commerce, Science, and Transportation of the Senate. 80 p.

National Marine Fisheries Service. 2001. Marine Fisheries Stock Assessment Improvement Plan. Report of the National Marine Fisheries Service National Task Force for Improving Stock Assessments. U.S. Dept of Commerce, NOAA Technical Memorandum. NMFS-F/SPO-56, 69 p., 25 appendices.

National Marine Fisheries Service. 2002. NMFS National Standing Working Group on Fishing Technology: Report of First Meeting, March 6-7, 2002. Natl. Mar. Fish. Serv., Pascagoula, MS, 48 p. (Available at www.nmfs.noaa.gov/bycatch.htm)

National Marine Fisheries Service. 2002. Fisheries Observers Insurance, Liability, and Labor Workshop, June 12-14, 2001; Technical Memorandum. Prepared by MRAG Americas, Tampa, FL; edited by D. Hansford and V. Cornish, NMFS Office of Science and Technology.

National Marine Fisheries Service. 2003. Plan to Manage Risks and Minimize Liabilities Associated with the Deployment of Contracted Fisheries Observers. Prepared by D. Cox, Quantech, Inc. and R. Goldberg, Schnader Harrison Segal & Lewis, NOAA Contract No. 50-DGNF-1-90089.

National Research Council. 1999. Sharing the Fish: Toward a National Policy on Individual Fishing Quotas. National Academy Press, Washington, DC, 422 p.

National Research Council. 2000. *Improving the Collection, Management, and Use of Marine Fisheries Data.* National Academy Press, Washington, DC. 222 pp.

NEFSC. 1996. Analysis of 1994 fishing vessel logbook data. Report of the 22nd Northeast Regional Stock Assessment Workshop. NEFSC, Woods Hole, MA.

Northwest Fisheries Science Center, West Coast Groundfish Observer Program: Initial Data Report and Summary Analyses. 2003. Northwest Fisheries Science Center, 2725 Montlake Boulevard East, Seattle, WA 98112.

PacFIN. 2003. On-line report #316 16-Apr-2003 18:26. www.psmfc.org/pacfin/data/r316.p02.

Price, T. 1999. The California drift gillnet fishery. In: Development of a Process for the Long-Term Monitoring of MMPA Category I and II Commercial Fisheries. edited by A. Didier and V. Cornish, NOAA Technical Memorandum NMFS-OPR-14. p. 23-25.

Powers, J.E. and V. R. Restrepo. 1993. Evaluation of stock assessment research for Gulf of Mexico king mackerel: benefits and costs to management. N. Amer. J. Fish. Manage. 13:15-26.

RecFIN 2003. RecFIN MRFSS Estimates. www.psmfc.org/recfin/forms/est.html

Turnock, J., Wilkins, M., Saelens, M., and Lauth, R. 1994. Status of west coast dover sole in 1994. In: Appendices to the status of the Pacific coast groundfish fishery through 1994 and recommended acceptable biological catches for 1995. Pacific Fishery Management Council, Metro Center, Suite 420, 2000 SW First Avenue, Portland, OR 97201, U.S.A. pp. C-1 – C-62.

Walsh, W.A. 2000. Comparison of fish catches reported by fishery observers and in logbooks of Hawaii-based commercial longline vessels. NMFS Southwest Fisheries Science Center, Honolulu Laboratory, Administrative Report H-00-07, 45 p.

Walsh, W.A., P. Kleiber and M. McCracken. 2002. Comparison of logbook reports of incidental blue shark catch rates of Hawaii-based longline vessels to fishery observer data by application of a generalized additive model. Fisheries Research 58:79-94.

Western Pacific Fishery Management Council. 2002. Magnuson-Stevens Act definitions and required provisions: bycatch provisions. Amendment 6 to the FMP for Bottomfish and Seamount Groundfish Fisheries of the Western Pacific Region and Amendment 8 to the FMP for the Pelagic Fisheries of the Western Pacific Region. Dec 20, 2002. 144p.

Williams, G. H., C. C. Schmitt, S. H. Hoag, and J. D. Berger. 1989. Incidental catch and mortality of Pacific halibut, 1962-1986. Int. Pac. Halibut Comm. Tech. Rpt. 23. 94 p.

Appendix 1. Definition of Bycatch Terms (from NMFS 1998a)

Bycatch Discarded catch of any living marine resource plus retained incidental catch and unobserved mortality due to a direct encounter with fishing gear.

Discarded catch Living marine resources discarded whole at sea or elsewhere, including those released alive.

Incidental catch Catch that is not part of the targeted catch. This includes retained nontargeted catch and discarded catch. Examples are finfish catch in shrimp fishery that may be sold or kept for personal use, juvenile pollock catch that now must be retained in the Alaska pollock fishery, and seabird catch in the Pacific longline tuna/swordfish fishery that must be discarded.

Target catch Catch of a species, a particular size or sex, or an assemblage of species that is primarily sought in a fishery, such as shrimp in a shrimp fishery or mature female fish in a roe fishery. The definition of targeted catch within a fishery is not static, for example in a multispecies fishery, the mix of species targeted and caught may be quite variable and may change over time.

Total catch Retained catch plus discarded catch.

Landings Portion of the total catch that is brought ashore.

Total fishing-related mortality Mortality of living marine resources due to a direct encounter with fishing gear.

Bycatch mortality All mortality of living marine resources associated with discarded catch plus unobserved mortality.

Unobserved mortality Mortality of living marine resources due to a direct encounter with fishing gear that does not result in the capture of that species by a fisherman. This includes mortality due to lost or discarded fishing gear, as well as live releases that subsequently die.

Regulatory discards Catch that is required by regulation to be discarded.

Discretionary discards Catch that is discarded because of undesirable species, size, sex, or quality, or for other reasons, including economic discards as defined in the Magnuson-Stevens Act.

Prohibited species A species for which retention is prohibited in a specific fishery.

Protected species Any species that is subject to special conservation and management measures (e.g., Marine Mammal Protection Act, Endangered Species Act, and Migratory Bird Treaty Act).

Living marine resources Any animal or plant life that spends part of its life in coastal or ocean waters.

Appendix 2. A Characterization of Precision Tradeoffs in an Assessment

In order to develop an explanatory and qualitative characterization of the relationship of the precision of components within an assessment with the precision of the management quantities estimated by that assessment, the following approximation was utilized:

$$(CV_{TAC\ or\ PBR})^2 = (CV_{Catch})^2 + (CV_{Fopt/F})^2 + \ (CV_{Catch})^2\ (CV_{Fopt/F})^2$$

where *Fopt/F* is the ratio of the desired exploitation rate to the present exploitation rate and $CV_{catch.}$ is the precision of the total catch of a stock (not just the bycatch). The precision of the total catch of a stock depends upon the precision of the estimate of bycatch of that stock, the precision of the "other catch" (all the other catch other than bycatch) and the proportion of the total catch of a stock that comes from bycatch ($P_{bycatch}$):

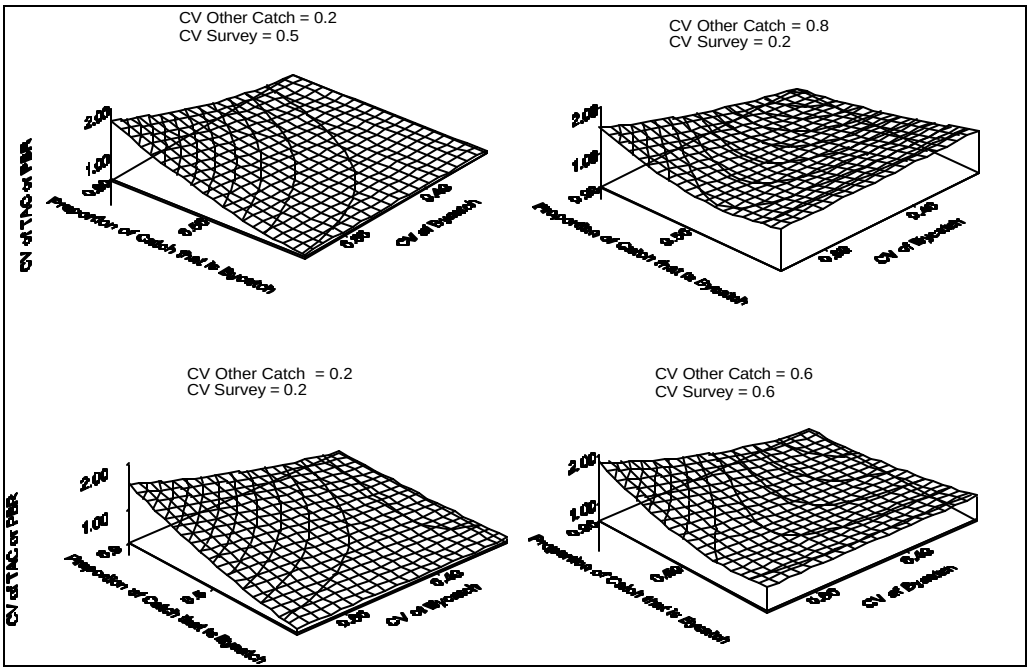

Appendix Figure 1. Diagram of hypothetical precision in the estimate of management quantities such as TAC or PBR as a function of the precision of estimates of the catch other than bycatch (other catch), the other assessment information such as survey indices (survey), the CV of bycatch, and the proportion of catch that is bycatch.

$$(CV_{catch})^2 = (CV_{bycatch}\ P_{bycatch}\ )^2 + \ [CV_{other\ catch}\ (1\text{-}P_{bycatch}\ )]^2$$

The precision of the *Fopt/F* ratio can be approximated by

$$(CV_{Fopt/F})^2 = (CV_{Catch})^2 + (CV_{survey})^2 + (CV_{Catch})^2\ (CV_{survey})^2$$

where $(CV_{survey})^2$ is the precision of an arbitrary variable denoting all the factors of an assessment other than catch (e.g. the survey index of abundance). Combining the above equations leaves an expression of the precision of the management quantities as a function of the precision of the assessment, the precision of the bycatch, the precision of the other catch and the proportion of the catch comprised of bycatch. The relationships given are very broad approximations not meant to be exact. Nevertheless, they provide useful examples for discussions of precision requirements arising from the assessment evaluation of management quantities (see Appendix Figure 1).

Appendix 3. Precision of a Bycatch Estimate of an Aggregate of Species and the Precision of Estimates of Individual Species within the Aggregate

The relationship between the precision of an estimate of bycatch of an individual species and the precision of the estimate of bycatch of the aggregate of all species may be approximated by:

$$(CV_{species})^2 = (CV_{agg})^2 + [(1 - P_{species})/(x_{agg} P_{species})][1 + (CV_{agg})^2]$$

where $P_{species}$ is the proportion of the total aggregate bycatch (agg) that an individual species comprises and CV_{agg} is the precision of the aggregate estimate (x_{agg}). This relationship assumes that proportional encounters are random which often is not the case, i.e. individual species cluster with others of the same species. Therefore, the above relationship may underestimate the *CV* of an individual species in an actual application.

Appendix 4. Comments on Precision Requirements for Rare-event Species

The same sampling and estimation methods may not be appropriate for all bycatch monitoring programs. Most of the discussions and formulas in this report assume that (1) a normal distribution is appropriate when computing the confidence intervals for the estimated bycatch, (2) an equal probability sample within strata is practical, and (3) the bias of the ratio estimator is negligible. In some fisheries where these assumptions do not hold, the use of the coefficient of variation to specify a precision goal, the estimator, and the sampling design that are discussed in this report are not appropriate. In fisheries in which the bycatch of protected species is extremely rare, this creates problems. Below are more details concerning the guidelines given in this report and the problems faced with the observer programs of these fisheries.

When designing a bycatch monitoring program, it seems that the goal should be either to specify a maximum allowable difference, absolute or relative, between the estimate and the true value and a small probability that the error may exceed the maximum allowable difference or to minimize the cost of obtaining specific criteria with respect to the confidence interval for an estimate of bycatch. To meet either objective the confidence interval, not just the CV, of the estimate needs to be considered.

If using an unbiased estimator with a normal distribution, the CV provides a straightforward measurement related to the distance between the estimate and the upper and lower bound of the confidence interval. However, there are situations when a biased estimator is more efficient than an unbiased estimator (the biased estimator has a smaller mean square error), or it is unreasonable to assume the normal distribution. For example, the bycatch of protected species is extremely rare in the Hawaii longline and bottomfish fisheries. Because of the extreme rarity, even for a large sample of trips, say over 100, the Finite-Central Limit Theorem does not apply and assuming the normal distribution would result in inaccurate confidence intervals (the lower bound of the confidence interval would be a negative number). For the species where bycatch is extremely rare, the distribution of the estimated total is likely not symmetrical, but has a long right-hand tail. In such cases where exceeding allowed takes is a concern, then the focus should be on the distance between the estimate and the upper bound of the confidence interval.

For example, take the loggerhead, leatherback or green sea turtle bycatch in the Hawaiian longline fishery: in order to obtain a CV of between 20% and 30% for these species, sampling of 900

to 1000 trips (80% to 90% coverage) may be required. Is this worth the expense? If the estimated total bycatch is small, such as five individuals, do we really need to achieve a standard error of 1 to 2 individuals to monitor bycatch? If jeopardy is such a fine line that four turtle takes do not jeopardize the population but five takes do, then 100% coverage may be needed.

Also, CV is undefined if no bycatch is observed and the estimated total bycatch is zero. Not only is there a problem with dividing by zero, but it is unclear how best to estimate the standard error when no bycatch has been observed. The objective of an observer program might be to monitor a protected species bycatch; however, even with 100% coverage, we might not expect to observe ***any*** bycatch of this species. With what level of uncertainty should we estimate zero bycatch? This should be defined by management.

SEC. 303. CONTENTS OF FISHERY MANAGEMENT PLANS 16 U.S.C. 1853

95-354, 99-659, 101-627, 104-297

(a) REQUIRED PROVISIONS.—Any fishery management plan which is prepared by any Council, or by the Secretary, with respect to any fishery, shall—

(1) contain the conservation and management measures, applicable to foreign fishing and fishing by vessels of the United States, which are—

(A) necessary and appropriate for the conservation and management of the fishery to prevent overfishing and rebuild overfished stocks, and to protect, restore, and promote the long-term health and stability of the fishery;

(B) described in this subsection or subsection (b), or both; and

(C) consistent with the national standards, the other provisions of this Act, regulations implementing recommendations by international organizations in which the United States participates (including but not limited to closed areas, quotas, and size limits), and any other applicable law;

(2) contain a description of the fishery, including, but not limited to, the number of vessels involved, the type and quantity of fishing gear used, the species of fish involved and their location, the cost likely to be incurred in management, actual and potential revenues from the fishery, any recreational interest in the fishery, and the nature and extent of foreign fishing and Indian treaty fishing rights, if any;

(3) assess and specify the present and probable future condition of, and the maximum sustainable yield and optimum yield from, the fishery, and include a summary of the information utilized in making such specification;

(4) assess and specify—

(A) the capacity and the extent to which fishing vessels of the United States, on an annual basis, will harvest the optimum yield specified under paragraph (3),

(B) the portion of such optimum yield which, on an annual basis, will not be harvested by fishing vessels of the United States and can be made available for foreign fishing, and

(C) the capacity and extent to which United States fish processors, on an annual basis, will process that portion of such optimum yield that will be harvested by fishing vessels of the United States;

109-479

(5) specify the pertinent data which shall be submitted to the Secretary with respect to commercial, recreational, charter fishing, and fish processing in the fishery, including, but not limited to, information regarding the type and quantity of fishing gear used, catch by species in numbers of fish or weight thereof, areas in which fishing was engaged in, time of fishing, number of hauls, economic information necessary to meet the requirements of this Act, and the estimated processing capacity of, and the actual processing capacity utilized by, United States fish processors;

(6) consider and provide for temporary adjustments, after consultation with the Coast Guard and persons utilizing the fishery, regarding access to the fishery for vessels otherwise prevented from harvesting because of weather or other ocean conditions affecting the safe conduct of the fishery; except that the adjustment shall not adversely affect conservation efforts in other fisheries or discriminate among participants in the affected fishery;

(7) describe and identify essential fish habitat for the fishery based on the guidelines established by the Secretary under section 305(b)(1)(A), minimize to the extent practicable adverse effects on such habitat caused by fishing, and identify other actions to encourage the conservation and enhancement of such habitat;

(8) in the case of a fishery management plan that, after January 1, 1991, is submitted to the Secretary for review under section 304(a) (including any plan for which an amendment is submitted to the Secretary for such review) or is prepared by the Secretary, assess and specify the nature and extent of scientific data which is needed for effective implementation of the plan;

109-479

(9) include a fishery impact statement for the plan or amendment (in the case of a plan or amendment thereto submitted to or prepared by the Secretary after October 1, 1990) which shall assess, specify, and analyze the likely effects, if any, including the cumulative conservation, economic, and social impacts, of the conservation and management measures on, and possible mitigation measures for—

(A) participants in the fisheries and fishing communities affected by the plan or amendment;

(B) participants in the fisheries conducted in adjacent areas under the authority of another Council, after consultation with such Council and representatives of those participants; and

(C) the safety of human life at sea, including whether and to what extent such measures may affect the safety of participants in the fishery;

(10) specify objective and measurable criteria for identifying when the fishery to which the plan applies is overfished (with an analysis of how the criteria were determined and the relationship of the criteria to the reproductive potential of stocks of fish in that fishery) and, in the case of a fishery which the Council or the Secretary has determined is approaching an overfished condition or is overfished, contain conservation and management measures to prevent overfishing or end overfishing and rebuild the fishery;

(11) establish a standardized reporting methodology to assess the amount and type of bycatch occurring in the fishery, and include conservation and management measures that, to the extent practicable and in the following priority—

(A) minimize bycatch; and

(B) minimize the mortality of bycatch which cannot be avoided;

(12) assess the type and amount of fish caught and released alive during recreational fishing under catch and release fishery management programs and the mortality of such fish, and include conservation and management measures that, to the extent practicable, minimize mortality and ensure the extended survival of such fish;

109-479

(13) include a description of the commercial, recreational, and charter fishing sectors which participate in the fishery, including its economic impact, and, to the extent practicable, quantify trends in landings of the managed fishery resource by the commercial, recreational, and charter fishing sectors;

109-479

(14) to the extent that rebuilding plans or other conservation and management measures which reduce the overall harvest in a fishery are necessary, allocate, taking into consideration the economic impact of the harvest restrictions or recovery benefits on the fishery participants in each sector, any harvest restrictions or recovery benefits fairly and equitably among the commercial, recreational, and charter fishing sectors in the fishery and;

109-479

(15) establish a mechanism for specifying annual catch limits in the plan (including a multiyear plan), implementing regulations, or annual specifications, at a level such that overfishing does not occur in the fishery, including measures to ensure accountability.

97-453, 99-659, 101-627, 102-251, **104-297**

(b) DISCRETIONARY PROVISIONS.—Any fishery management plan which is prepared by any Council, or by the Secretary, with respect to any fishery, may—

(1) require a permit to be obtained from, and fees to be paid to, the Secretary, with respect to—

(A) any fishing vessel of the United States fishing, or wishing to fish, in the exclusive economic zone [or special areas,]* or for anadromous species or Continental Shelf fishery resources beyond such zone [or areas]*;

(B) the operator of any such vessel; or

(C) any United States fish processor who first receives fish that are subject to the plan;

109-479

(2)(A) designate zones where, and periods when, fishing shall be limited, or shall not be permitted, or shall be permitted only by specified types of fishing vessels or with specified types and quantities of fishing gear;

(B) designate such zones in areas where deep sea corals are identified under section 408, to protect deep sea corals from physical damage from fishing gear or to prevent loss or damage to such fishing gear from interactions with deep sea corals, after considering long-term sustainable uses of fishery resources in such areas; and

(C) with respect to any closure of an area under this Act that prohibits all fishing, ensure that such closure—

(i) is based on the best scientific information available;

(ii) includes criteria to assess the conservation benefit of the closed area;

(iii) establishes a timetable for review of the closed area's performance that is consistent with the purposes of the closed area; and

(iv) is based on an assessment of the benefits and impacts of the closure, including its size, in relation to other management measures (either alone or in combination with such measures), including the benefits and impacts of limiting access to: users of the area, overall fishing activity, fishery science, and fishery and marine conservation;

(3) establish specified limitations which are necessary and appropriate for the conservation and management of the fishery on the—

(A) catch of fish (based on area, species, size, number, weight, sex, bycatch, total biomass, or other factors);

(B) sale of fish caught during commercial, recreational, or charter fishing, consistent with any applicable Federal and State safety and quality requirements; and

(C) transshipment or transportation of fish or fish products under permits issued pursuant to section 204;

(4) prohibit, limit, condition, or require the use of specified types and quantities of fishing gear, fishing vessels, or equipment for such vessels, including devices which may be required to facilitate enforcement of the provisions of this Act;

109-479

(5) incorporate (consistent with the national standards, the other provisions of this Act, and any other applicable law) the relevant fishery conservation and management measures of the coastal States nearest to the fishery and take into account the different circumstances affecting fisheries from different States and ports, including distances to fishing grounds and proximity to time and area closures;

109-479

(6) establish a limited access system for the fishery in order to achieve optimum yield if, in developing such system, the Council and the Secretary take into account—

(A) present participation in the fishery;

(B) historical fishing practices in, and dependence on, the fishery;

(C) the economics of the fishery;

(D) the capability of fishing vessels used in the fishery to engage in other fisheries;

(E) the cultural and social framework relevant to the fishery and any affected fishing communities;

(F) the fair and equitable distribution of access privileges in the fishery; and

(G) any other relevant considerations;

(7) require fish processors who first receive fish that are subject to the plan to submit data which are necessary for the conservation and management of the fishery;

(8) require that one or more observers be carried on board a vessel of the United States engaged in fishing for species that are subject to the plan, for the purpose of collecting data necessary for the conservation and management of the fishery; except that such a vessel shall not be required to carry an observer on board if the facilities of the vessel for the quartering of an observer, or for carrying out observer functions, are so inadequate or unsafe that the health or safety of the observer or the safe operation of the vessel would be jeopardized;

(9) assess and specify the effect which the conservation and management measures of the plan will have on the stocks of naturally spawning anadromous fish in the region;

(10) include, consistent with the other provisions of this Act, conservation and management measures that provide harvest incentives for participants within each gear group to employ fishing practices that result in lower levels of bycatch or in lower levels of the mortality of bycatch;

(11) reserve a portion of the allowable biological catch of the fishery for use in scientific research;

109-479

(12) include management measures in the plan to conserve target and non-target species and habitats, considering the variety of ecological factors affecting fishery populations; and

(14)[sic][15] prescribe such other measures, requirements, or conditions and restrictions as are determined to be necessary and appropriate for the conservation and management of the fishery.

97-453, **104-297**

(c) PROPOSED REGULATIONS.—Proposed regulations which the Council deems necessary or appropriate for the purposes of—

(1) implementing a fishery management plan or plan amendment shall be submitted to the Secretary simultaneously with the plan or amendment under section 304; and

(2) making modifications to regulations implementing a fishery management plan or plan amendment may be submitted to the Secretary at any time after the plan or amendment is approved under section 304.

[15] So in original.

P.L. 109-479, sec. 104(b), MSA § 303 note **16 U.S.C. 1853 note**

EFFECTIVE DATES; APPLICATION TO CERTAIN SPECIES.—The amendment made by subsection (a)(10)[16]—

(1) shall, unless otherwise provided for under an international agreement in which the United States participates, take effect—

(A) in fishing year 2010 for fisheries determined by the Secretary to be subject to overfishing; and

(B) in fishing year 2011 for all other fisheries; and

(2) shall not apply to a fishery for species that have a life cycle of approximately 1 year unless the Secretary has determined the fishery is subject to overfishing of that species; and

(3) shall not limit or otherwise affect the requirements of section 301(a)(1) or 304(e) of the Magnuson-Stevens Fishery Conservation and Management Act (16 U.S.C. 1851(a)(1) or 1854(e), respectively).

109-479

SEC. 303A. LIMITED ACCESS PRIVILEGE PROGRAMS. **16 U.S.C. 1853a**

(a) IN GENERAL.—After the date of enactment of the Magnuson-Stevens Fishery Conservation and Management Reauthorization Act of 2006, a Council may submit, and the Secretary may approve, for a fishery that is managed under a limited access system, a limited access privilege program to harvest fish if the program meets the requirements of this section.

(b) NO CREATION OF RIGHT, TITLE, OR INTEREST.—Limited access privilege, quota share, or other limited access system authorization established, implemented, or managed under this Act—

(1) shall be considered a permit for the purposes of sections 307, 308, and 309;

(2) may be revoked, limited, or modified at any time in accordance with this Act, including revocation if the system is found to have jeopardized the sustainability of the stock or the safety of fishermen;

(3) shall not confer any right of compensation to the holder of such limited access privilege, quota share, or other such limited access system authorization if it is revoked, limited, or modified;

(4) shall not create, or be construed to create, any right, title, or interest in or to any fish before the fish is harvested by the holder; and

(5) shall be considered a grant of permission to the holder of the limited access privilege or quota share to engage in activities permitted by such limited access privilege or quota share.

[16] Section 104(a)(10) of P.L. 109-479 added section 303(a)(15).

(c) REQUIREMENTS FOR LIMITED ACCESS PRIVILEGES.—

(1) IN GENERAL.—Any limited access privilege program to harvest fish submitted by a Council or approved by the Secretary under this section shall—

(A) if established in a fishery that is overfished or subject to a rebuilding plan, assist in its rebuilding;

(B) if established in a fishery that is determined by the Secretary or the Council to have over-capacity, contribute to reducing capacity;

(C) promote—

(i) fishing safety;

(ii) fishery conservation and management; and

(iii) social and economic benefits;

(D) prohibit any person other than a United States citizen, a corporation, partnership, or other entity established under the laws of the United States or any State, or a permanent resident alien, that meets the eligibility and participation requirements established in the program from acquiring a privilege to harvest fish, including any person that acquires a limited access privilege solely for the purpose of perfecting or realizing on a security interest in such privilege;

(E) require that all fish harvested under a limited access privilege program be processed on vessels of the United States or on United States soil (including any territory of the United States);

(F) specify the goals of the program;

(G) include provisions for the regular monitoring and review by the Council and the Secretary of the operations of the program, including determining progress in meeting the goals of the program and this Act, and any necessary modification of the program to meet those goals, with a formal and detailed review 5 years after the implementation of the program and thereafter to coincide with scheduled Council review of the relevant fishery management plan (but no less frequently than once every 7 years);

(H) include an effective system for enforcement, monitoring, and management of the program, including the use of observers or electronic monitoring systems;

(I) include an appeals process for administrative review of the Secretary's decisions regarding initial allocation of limited access privileges;

(J) provide for the establishment by the Secretary, in consultation with appropriate Federal agencies, for an information collection and review process to provide any additional information needed to determine whether any illegal acts of anti-competition, anti-trust, price collusion, or price fixing have occurred among regional fishery associations or persons receiving limited access privileges under the program; and

(K) provide for the revocation by the Secretary of limited access privileges held by any person found to have violated the antitrust laws of the United States.

(2) WAIVER.—The Secretary may waive the requirement of paragraph (1)(E) if the Secretary determines that—

(A) the fishery has historically processed the fish outside of the United States; and

(B) the United States has a seafood safety equivalency agreement with the country where processing will occur.

(3) FISHING COMMUNITIES.—

(A) IN GENERAL.—

(i) ELIGIBILITY.—To be eligible to participate in a limited access privilege program to harvest fish, a fishing community shall—

(I) be located within the management area of the relevant Council;

(II) meet criteria developed by the relevant Council, approved by the Secretary, and published in the Federal Register;

(III) consist of residents who conduct commercial or recreational fishing, processing, or fishery-dependent support businesses within the Council's management area; and

(IV) develop and submit a community sustainability plan to the Council and the Secretary that demonstrates how the plan will address the social and economic development needs of coastal communities, including those that have not historically had the resources to participate in the fishery, for approval based on criteria developed by the Council that have been approved by the Secretary and published in the Federal Register.

(ii) FAILURE TO COMPLY WITH PLAN.—The Secretary shall deny or revoke limited access privileges granted under this section for any person who fails to comply with the requirements of the community sustainability plan. Any limited access privileges denied or revoked under this section may be reallocated to other eligible members of the fishing community.

(B) PARTICIPATION CRITERIA.—In developing participation criteria for eligible communities under this paragraph, a Council shall consider—

(i) traditional fishing or processing practices in, and dependence on, the fishery;

(ii) the cultural and social framework relevant to the fishery;

(iii) economic barriers to access to fishery;

(iv) the existence and severity of projected economic and social impacts associated with implementation of limited access privilege programs on harvesters, captains, crew, processors, and other businesses substantially dependent upon the fishery in the region or subregion;

(v) the expected effectiveness, operational transparency, and equitability of the community sustainability plan; and

(vi) the potential for improving economic conditions in remote coastal communities lacking resources to participate in harvesting or processing activities in the fishery.

(4) REGIONAL FISHERY ASSOCIATIONS.—

(A) IN GENERAL.—To be eligible to participate in a limited access privilege program to harvest fish, a regional fishery association shall—

(i) be located within the management area of the relevant Council;

(ii) meet criteria developed by the relevant Council, approved by the Secretary, and published in the Federal Register;

(iii) be a voluntary association with established by-laws and operating procedures;

(iv) consist of participants in the fishery who hold quota share that are designated for use in the specific region or subregion covered by the regional fishery association, including commercial or recreational fishing, processing, fishery-dependent support businesses, or fishing communities;

(v) not be eligible to receive an initial allocation of a limited access privilege but may acquire such privileges after the initial allocation, and may hold the annual fishing privileges of any limited access privileges it holds or the annual fishing privileges that is [sic][17] members contribute; and

(vi) develop and submit a regional fishery association plan to the Council and the Secretary for approval based on criteria developed by the Council that have been approved by the Secretary and published in the Federal Register.

(B) FAILURE TO COMPLY WITH PLAN.—The Secretary shall deny or revoke limited access privileges granted under this section to any person participating in a regional fishery association who fails to comply with the requirements of the regional fishery association plan.

[17] So in original.

(C) PARTICIPATION CRITERIA.—In developing participation criteria for eligible regional fishery associations under this paragraph, a Council shall consider—

(i) traditional fishing or processing practices in, and dependence on, the fishery;

(ii) the cultural and social framework relevant to the fishery;

(iii) economic barriers to access to fishery;

(iv) the existence and severity of projected economic and social impacts associated with implementation of limited access privilege programs on harvesters, captains, crew, processors, and other businesses substantially dependent upon the fishery in the region or subregion;

(v) the administrative and fiduciary soundness of the association; and

(vi) the expected effectiveness, operational transparency, and equitability of the fishery association plan.

(5) ALLOCATION.—In developing a limited access privilege program to harvest fish a Council or the Secretary shall—

(A) establish procedures to ensure fair and equitable initial allocations, including consideration of—

(i) current and historical harvests;

(ii) employment in the harvesting and processing sectors;

(iii) investments in, and dependence upon, the fishery; and

(iv) the current and historical participation of fishing communities;

(B) consider the basic cultural and social framework of the fishery, especially through—

(i) the development of policies to promote the sustained participation of small owner-operated fishing vessels and fishing communities that depend on the fisheries, including regional or port-specific landing or delivery requirements; and

(ii) procedures to address concerns over excessive geographic or other consolidation in the harvesting or processing sectors of the fishery;

(C) include measures to assist, when necessary and appropriate, entry-level and small vessel owner-operators, captains, crew, and fishing communities through set-asides of harvesting allocations, including providing privileges, which may include set-asides or allocations of harvesting privileges, or economic assistance in the purchase of limited access privileges;

(D) ensure that limited access privilege holders do not acquire an excessive share of the total limited access privileges in the program by—

(i) establishing a maximum share, expressed as a percentage of the total limited access privileges, that a limited access privilege holder is permitted to hold, acquire, or use; and

(ii) establishing any other limitations or measures necessary to prevent an inequitable concentration of limited access privileges; and

(E) authorize limited access privileges to harvest fish to be held, acquired, used by, or issued under the system to persons who substantially participate in the fishery, including in a specific sector of such fishery, as specified by the Council.

(6) PROGRAM INITIATION.—

(A) LIMITATION.—Except as provided in subparagraph (D), a Council may initiate a fishery management plan or amendment to establish a limited access privilege program to harvest fish on its own initiative or if the Secretary has certified an appropriate petition.

(B) PETITION.—A group of fishermen constituting more than 50 percent of the permit holders, or holding more than 50 percent of the allocation, in the fishery for which a limited access privilege program to harvest fish is sought, may submit a petition to the Secretary requesting that the relevant Council or Councils with authority over the fishery be authorized to initiate the development of the program. Any such petition shall clearly state the fishery to which the limited access privilege program would apply. For multispecies permits in the Gulf of Mexico, only those participants who have substantially fished the species proposed to be included in the limited access program shall be eligible to sign a petition for such a program and shall serve as the basis for determining the percentage described in the first sentence of this subparagraph.

(C) CERTIFICATION BY SECRETARY.—Upon the receipt of any such petition, the Secretary shall review all of the signatures on the petition and, if the Secretary determines that the signatures on the petition represent more than 50 percent of the permit holders, or holders of more than 50 percent of the allocation in the fishery, as described by subparagraph (B), the Secretary shall certify the petition to the appropriate Council or Councils.

(D) NEW ENGLAND AND GULF REFERENDUM.—

(i) Except as provided in clause (iii) for the Gulf of Mexico commercial red snapper fishery, the New England and Gulf Councils may not submit, and the Secretary may not approve or implement, a fishery management plan or amendment that creates an individual fishing quota program, including a Secretarial plan, unless such a system, as ultimately developed, has been approved by more than 2⁄3 of those voting in a referendum among eligible permit holders, or other persons described in clause (v), with respect to the New England Council, and by a majority of those voting in the referendum among eligible permit holders with respect to the Gulf Council. For multispecies permits in the Gulf of Mexico, only those participants who have substantially fished the species proposed to be included in the individual fishing quota program shall be eligible to vote in such a referendum. If an individual fishing quota program fails to be approved by the requisite number of those voting, it may be revised and submitted for approval in a subsequent referendum.

(ii) The Secretary shall conduct a referendum under this subparagraph, including notifying all persons eligible to participate in the referendum and making available to them information concerning the schedule, procedures, and eligibility requirements for the referendum process and the proposed individual fishing quota program. Within 1 year after the date of enactment of the Magnuson-Stevens Fishery Conservation and Management Reauthorization Act of 2006, the Secretary shall publish guidelines and procedures to determine procedures and voting eligibility requirements for referenda and to conduct such referenda in a fair and equitable manner.

(iii) The provisions of section 407(c) of this Act shall apply in lieu of this subparagraph for an individual fishing quota program for the Gulf of Mexico commercial red snapper fishery.

(iv) Chapter 35 of title 44, United States Code, (commonly known as the Paperwork Reduction Act) does not apply to the referenda conducted under this subparagraph.

(v) The Secretary shall promulgate criteria for determining whether additional fishery participants are eligible to vote in the New England referendum described in clause (i) in order to ensure that crew members who derive a significant percentage of their total income from the fishery under the proposed program are eligible to vote in the referendum.

(vi) In this subparagraph, the term ‘individual fishing quota’ does not include a sector allocation.

(7) TRANSFERABILITY.—In establishing a limited access privilege program, a Council shall—

(A) establish a policy and criteria for the transferability of limited access privileges (through sale or lease), that is consistent with the policies adopted by the Council for the fishery under paragraph (5); and

(B) establish, in coordination with the Secretary, a process for monitoring of transfers (including sales and leases) of limited access privileges.

(8) PREPARATION AND IMPLEMENTATION OF SECRETARIAL PLANS.—This subsection also applies to a plan prepared and implemented by the Secretary under section 304(c) or 304(g).

(9) ANTITRUST SAVINGS CLAUSE.—Nothing in this Act shall be construed to modify, impair, or supersede the operation of any of the antitrust laws. For purposes of the preceding sentence, the term ‘antitrust laws’ has the meaning given such term in subsection (a) of the first section of the Clayton Act, except that such term includes section 5 of the Federal Trade Commission Act to the extent that such section 5 applies to unfair methods of competition.

(d) AUCTION AND OTHER PROGRAMS.—In establishing a limited access privilege program, a Council shall consider, and may provide, if appropriate, an auction system or other program to collect royalties for the initial, or any subsequent, distribution of allocations in a limited access privilege program if—

(1) the system or program is administered in such a way that the resulting distribution of limited access privilege shares meets the program requirements of this section; and

(2) revenues generated through such a royalty program are deposited in the Limited Access System Administration Fund established by section 305(h)(5)(B) and available subject to annual appropriations.

(e) COST RECOVERY.—In establishing a limited access privilege program, a Council shall—

(1) develop a methodology and the means to identify and assess the management, data collection and analysis, and enforcement programs that are directly related to and in support of the program; and

(2) provide, under section 304(d)(2), for a program of fees paid by limited access privilege holders that will cover the costs of management, data collection and analysis, and enforcement activities.

(f) CHARACTERISTICS.—A limited access privilege established after the date of enactment of the Magnuson-Stevens Fishery Conservation and Management Reauthorization Act of 2006 is a permit issued for a period of not more than 10 years that—

(1) will be renewed before the end of that period, unless it has been revoked, limited, or modified as provided in this subsection;

(2) will be revoked, limited, or modified if the holder is found by the Secretary, after notice and an opportunity for a hearing under section 554 of title 5, United States Code, to have failed to comply with any term of the plan identified in the plan as cause for revocation, limitation, or modification of a permit, which may include conservation requirements established under the plan;

(3) may be revoked, limited, or modified if the holder is found by the Secretary, after notice and an opportunity for a hearing under section 554 of title 5, United States Code, to have committed an act prohibited by section 307 of this Act; and

(4) may be acquired, or reacquired, by participants in the program under a mechanism established by the Council if it has been revoked, limited, or modified under paragraph (2) or (3).

(g) LIMITED ACCESS PRIVILEGE ASSISTED PURCHASE PROGRAM.—

(1) IN GENERAL.—A Council may submit, and the Secretary may approve and implement, a program which reserves up to 25 percent of any fees collected from a fishery under section 304(d)(2) to be used, pursuant to section 53706(a)(7) of title 46, United States Code, to issue obligations that aid in financing—

(A) the purchase of limited access privileges in that fishery by fishermen who fish from small vessels; and

(B) the first-time purchase of limited access privileges in that fishery by entry level fishermen.

(2) ELIGIBILITY CRITERIA.—A Council making a submission under paragraph (1) shall recommend criteria, consistent with the provisions of this Act, that a fisherman must meet to qualify for guarantees under subparagraphs (A) and (B) of paragraph (1) and the portion of funds to be allocated for guarantees under each subparagraph.

(h) EFFECT ON CERTAIN EXISTING SHARES AND PROGRAMS.—Nothing in this Act, or the amendments made by the Magnuson-Stevens Fishery Conservation and Management Reauthorization Act of 2006, shall be construed to require a reallocation or a reevaluation of individual quota shares, processor quota shares, cooperative programs, or other quota programs, including sector allocation in effect before the date of enactment of the Magnuson-Stevens Fishery Conservation and Management Reauthorization Act of 2006.

(i) TRANSITION RULES.—

(1) IN GENERAL.—The requirements of this section shall not apply to any quota program, including any individual quota program, cooperative program, or sector allocation for which a Council has taken final action or which has been submitted by a Council to the Secretary, or approved by the Secretary, within 6 months after the date of enactment of the Magnuson-Stevens Fishery Conservation and Management Reauthorization Act of 2006, except that—

(A) the requirements of section 303(d) of this Act in effect on the day before the date of enactment of that Act shall apply to any such program;

(B) the program shall be subject to review under subsection (c)(1)(G) of this section not later than 5 years after the program implementation; and

(C) nothing in this subsection precludes a Council from incorporating criteria contained in this section into any such plans.

(2) PACIFIC GROUNDFISH PROPOSALS.—The requirements of this section, other than subparagraphs (A) and (B) of subsection (c)(1) and subparagraphs (A), (B), and (C) of paragraph (1) of this subsection, shall not apply to any proposal authorized under section 302(f) of the Magnuson-Stevens Fishery Conservation and Management Reauthorization Act of 2006 that is submitted within the timeframe prescribed by that section.

P.L. 109-479, sec. 106(e), MSA § 303A note **16 U.S.C. 1853a note**
APPLICATION WITH AMERICAN FISHERIES ACT.—Nothing in section 303A of the Magnuson-Stevens Fishery Conservation and Management Act (16 U.S.C. 1801 et seq.), as added by subsection (a) [P.L. 109-479], shall be construed to modify or supersede any provision of the American Fisheries Act (46 U.S.C. 12102 note; 16 U.S.C. 1851 note; et alia).

P.L. 104-297, sec. 108(i), MSA § 303 note
EXISTING QUOTA PLANS.—Nothing in this Act [P.L.104-297] or the amendments made by this Act shall be construed to require a reallocation of individual fishing quotas under any individual fishing quota program approved by the Secretary before January 4, 1995.

SEC. 304. ACTION BY THE SECRETARY 16 U.S.C. 1854

104-297

(a) REVIEW OF PLANS.—

(1) Upon transmittal by the Council to the Secretary of a fishery management plan or plan amendment, the Secretary shall—

(A) immediately commence a review of the plan or amendment to determine whether it is consistent with the national standards, the other provisions of this Act, and any other applicable law; and

(B) immediately publish in the Federal Register a notice stating that the plan or amendment is available and that written information, views, or comments of interested persons on the plan or amendment may be submitted to the Secretary during the 60-day period beginning on the date the notice is published.

(2) In undertaking the review required under paragraph (1), the Secretary shall—

(A) take into account the information, views, and comments received from interested persons;

(B) consult with the Secretary of State with respect to foreign fishing; and

(C) consult with the Secretary of the department in which the Coast Guard is operating with respect to enforcement at sea and to fishery access adjustments referred to in section 303(a)(6).

(3) The Secretary shall approve, disapprove, or partially approve a plan or amendment within 30 days of the end of the comment period under paragraph (1) by written notice to the Council. A notice of disapproval or partial approval shall specify—

(A) the applicable law with which the plan or amendment is inconsistent;

(B) the nature of such inconsistencies; and

(C) recommendations concerning the actions that could be taken by the Council to conform such plan or amendment to the requirements of applicable law.

If the Secretary does not notify a Council within 30 days of the end of the comment period of the approval, disapproval, or partial approval of a plan or amendment, then such plan or amendment shall take effect as if approved.

104-297
SEC. 402. INFORMATION COLLECTION **16 U.S.C. 1881a**

109-479
(a) COLLECTION PROGRAMS.—

(1) COUNCIL REQUESTS.—If a Council determines that additional information would be beneficial for developing, implementing, or revising a fishery management plan or for determining whether a fishery is in need of management, the Council may request that the Secretary implement an information collection program for the fishery which would provide the types of information specified by the Council. The Secretary shall undertake such an information collection program if he determines that the need is justified, and shall promulgate regulations to implement the program within 60 days after such determination is made. If the Secretary determines that the need for an information collection program is not justified, the Secretary shall inform the Council of the reasons for such determination in writing. The determinations of the Secretary under this paragraph regarding a Council request shall be made within a reasonable period of time after receipt of that request.

(2) SECRETARIAL INITIATION.—If the Secretary determines that additional information is necessary for developing, implementing, revising, or monitoring a fishery management plan, or for determining whether a fishery is in need of management, the Secretary may, by regulation, implement an information collection or observer program requiring submission of such additional information for the fishery.

109-479
(b) CONFIDENTIALITY OF INFORMATION.—
(1) Any information submitted to the Secretary, a State fishery management agency, or a marine fisheries commission by any person in compliance with the requirements of this Act shall be confidential and shall not be disclosed except—
(A) to Federal employees and Council employees who are responsible for fishery management plan development, monitoring, or enforcement;
(B) to State or Marine Fisheries Commission employees as necessary to further the Department's mission, subject to a confidentiality agreement that prohibits public disclosure of the identity of business of any person;
(C) to State employees who are responsible for fishery management plan enforcement, if the States employing those employees have entered into a fishery enforcement agreement with the Secretary and the agreement is in effect;
(D) when required by court order;
(E) when such information is used by State, Council, or Marine Fisheries Commission employees to verify catch under a limited access program, but only to the extent that such use is consistent with subparagraph (B);
(F) when the Secretary has obtained written authorization from the person submitting such information to release such information to persons for reasons not otherwise provided for in this subsection, and such release does not violate other requirements of this Act;
(G) when such information is required to be submitted to the Secretary for any determination under a limited access program; or

(H) in support of homeland and national security activities, including the Coast Guard's homeland security missions as defined in section 888(a)(2) of the Homeland Security Act of 2002 (6 U.S.C. 468(a)(2)).

(2) Any observer information shall be confidential and shall not be disclosed, except in accordance with the requirements of subparagraphs (A) through (H) of paragraph (1), or—

(A) as authorized by a fishery management plan or regulations under the authority of the North Pacific Council to allow disclosure to the public of weekly summary bycatch information identified by vessel or for haul-specific bycatch information without vessel identification;

(B) when such information is necessary in proceedings to adjudicate observer certifications; or

(C) as authorized by any regulations issued under paragraph (3) allowing the collection of observer information, pursuant to a confidentiality agreement between the observers, observer employers, and the Secretary prohibiting disclosure of the information by the observers or observer employers, in order—

(i) to allow the sharing of observer information among observers and between observers and observer employers as necessary to train and prepare observers for deployments on specific vessels; or

(ii) to validate the accuracy of the observer information collected.

(3) The Secretary shall, by regulation, prescribe such procedures as may be necessary to preserve the confidentiality of information submitted in compliance with any requirement or regulation under this Act, except that the Secretary may release or make public any such information in any aggregate or summary form which does not directly or indirectly disclose the identity or business of any person who submits such information. Nothing in this subsection shall be interpreted or construed to prevent the use for conservation and management purposes by the Secretary, or with the approval of the Secretary, the Council, of any information submitted in compliance with any requirement or regulation under this Act or the use, release, or publication of bycatch information pursuant to paragraph (2)(A).

(c) RESTRICTION ON USE OF CERTAIN INFORMATION.—

(1) The Secretary shall promulgate regulations to restrict the use, in civil enforcement or criminal proceedings under this Act, the Marine Mammal Protection Act of 1972 (16 U.S.C. 1361 et seq.), and the Endangered Species Act (16 U.S.C. 1531 et seq.), of information collected by voluntary fishery data collectors, including sea samplers, while aboard any vessel for conservation and management purposes if the presence of such a fishery data collector aboard is not required by any of such Acts or regulations thereunder.

(2) The Secretary may not require the submission of a Federal or State income tax return or statement as a prerequisite for issuance of a permit until such time as the Secretary has promulgated regulations to ensure the confidentiality of information contained in such return or statement, to limit the information submitted to that necessary to achieve a demonstrated conservation and management purpose, and to provide appropriate penalties for violation of such regulations.

(d) CONTRACTING AUTHORITY.—Notwithstanding any other provision of law, the Secretary may provide a grant, contract, or other financial assistance on a sole-source basis to a State, Council, or Marine Fisheries Commission for the purpose of carrying out information collection or other programs if—

(1) the recipient of such a grant, contract, or other financial assistance is specified by statute to be, or has customarily been, such State, Council, or Marine Fisheries Commission; or

(2) the Secretary has entered into a cooperative agreement with such State, Council, or Marine Fisheries Commission.

(e) RESOURCE ASSESSMENTS.—

(1) The Secretary may use the private sector to provide vessels, equipment, and services necessary to survey the fishery resources of the United States when the arrangement will yield statistically reliable results.

(2) The Secretary, in consultation with the appropriate Council and the fishing industry--

(A) may structure competitive solicitations under paragraph (1) so as to compensate a contractor for a fishery resources survey by allowing the contractor to retain for sale fish harvested during the survey voyage;

(B) in the case of a survey during which the quantity or quality of fish harvested is not expected to be adequately compensatory, may structure those solicitations so as to provide that compensation by permitting the contractor to harvest on a subsequent voyage and retain for sale a portion of the allowable catch of the surveyed fishery; and

(C) may permit fish harvested during such survey to count toward a vessel's catch history under a fishery management plan if such survey was conducted in a manner that precluded a vessel's participation in a fishery that counted under the plan for purposes of determining catch history.

(3) The Secretary shall undertake efforts to expand annual fishery resource assessments in all regions of the Nation.

104-297
SEC. 403. OBSERVERS **16 U.S.C. 1881b**

(a) GUIDELINES FOR CARRYING OBSERVERS.—Within one year after the date of enactment of the Sustainable Fisheries Act, the Secretary shall promulgate regulations, after notice and opportunity for public comment, for fishing vessels that carry observers. The regulations shall include guidelines for determining—

(1) when a vessel is not required to carry an observer on board because the facilities of such vessel for the quartering of an observer, or for carrying out observer functions, are so inadequate or unsafe that the health or safety of the observer or the safe operation of the vessel would be jeopardized; and

(2) actions which vessel owners or operators may reasonably be required to take to render such facilities adequate and safe.

Title 50: Wildlife and Fisheries
PART 622—FISHERIES OF THE CARIBBEAN, GULF, AND SOUTH ATLANTIC
Subpart A—General Provisions

§ 622.4 Permits and fees.

(a) *Permits required.* To conduct activities in fisheries governed in this part, valid permits, licenses, and endorsements are required as follows:

(1) *Charter vessel/headboat permits.* (i) For a person aboard a vessel that is operating as a charter vessel or headboat to fish for or possess, in or from the EEZ, species in any of the following species groups, a valid charter vessel/headboat permit for that species group must have been issued to the vessel and must be on board—

(A) Gulf coastal migratory pelagic fish.

(B) South Atlantic coastal migratory pelagic fish.

(C) Gulf reef fish.

(D) South Atlantic snapper-grouper.

(E) Atlantic dolphin and wahoo. (See paragraph (a)(5) of this section for the requirements for operator permits in the dolphin and wahoo fishery.)

(ii) See paragraph (r) of this section regarding a limited access system for charter vessel/headboat permits for Gulf reef fish and Gulf coastal migratory pelagic fish.

(iii) A charter vessel or headboat may have both a charter vessel/headboat permit and a commercial vessel permit. However, when a vessel is operating as a charter vessel or headboat, a person aboard must adhere to the bag limits. See the definitions of “Charter vessel” and “Headboat” in §622.2 for an explanation of when vessels are considered to be operating as a charter vessel or headboat, respectively.

(iv) If Federal regulations for Gulf reef fish in subparts A, B, or C of this part are more restrictive than state regulations, a person aboard a charter vessel or headboat for which a charter vessel/headboat permit for Gulf reef fish has been issued must comply with such Federal regulations regardless of where the fish are harvested.

(2) *Commercial vessel permits, licenses, and endorsements* —(i) [Reserved]

(ii) *Gillnets for king mackerel in the southern Florida west coast subzone.* For a person aboard a vessel to use a run-around gillnet for king mackerel in the southern Florida west coast subzone (see §622.42(c)(1)(i)(A)(*3*)), a commercial vessel permit for king mackerel and a king mackerel gillnet permit must have been issued to the vessel and must be on board. See paragraph (o) of this section regarding a limited access system applicable to king mackerel gillnet permits and restrictions on transferability of king mackerel gillnet permits.

(iii) *King mackerel.* For a person aboard a vessel to be eligible for exemption from the bag limits and to fish under a quota for king mackerel in or from the Gulf, Mid-Atlantic, or South Atlantic EEZ, a commercial vessel permit for king mackerel must have been issued to the vessel and must be on board. To obtain or renew a commercial vessel permit for king mackerel, at least 25 percent of the applicant's earned income, or at least $10,000, must have been derived from commercial fishing (i.e., harvest and first sale of fish) or from charter fishing during one of the three calendar years preceding the application. See paragraph (q) of this section regarding a limited access system applicable to commercial vessel permits for king mackerel, transfers of permits under the limited access system, and limited exceptions to the earned income or gross sales requirement for a permit.

(iv) *Spanish mackerel.* For a person aboard a vessel to be eligible for exemption from the bag limits and to fish under a quota for Spanish mackerel in or from the Gulf, Mid-Atlantic, or South Atlantic EEZ, a commercial vessel permit for Spanish mackerel must have been issued to the vessel and must be on board. To obtain or renew a commercial vessel permit for Spanish mackerel, at least 25 percent of the applicant's earned income, or at least $10,000, must have been derived from commercial fishing (i.e., harvest and first sale of fish) or from charter fishing during one of the 3 calendar years preceding the application.

(v) *Gulf reef fish.* For a person aboard a vessel to be eligible for exemption from the bag limits, to fish under a quota, as specified in §622.42(a)(1), or to sell Gulf reef fish in or from the Gulf EEZ, a commercial vessel permit for Gulf reef fish must have been issued to the vessel and must be on board. If Federal regulations for Gulf reef fish in subparts A, B, or C of this part are more restrictive than state regulations, a person aboard a vessel for which a commercial vessel permit for Gulf reef fish has been issued must comply with such Federal regulations regardless of where the fish are harvested. See paragraph (a)(2)(ix) of this section regarding an additional IFQ vessel endorsement required to fish for, possess, or land Gulf red snapper. To obtain or renew a commercial vessel permit for Gulf reef fish, more than 50 percent of the applicant's earned income must have been derived from commercial fishing (i.e., harvest and first sale of fish) or from charter fishing during either of the 2 calendar years preceding the application. See paragraph (m) of this section regarding a limited access system for commercial vessel permits for Gulf reef fish and limited exceptions to the earned income requirement for a permit.

(vi) *South Atlantic snapper-grouper.* For a person aboard a vessel to be eligible for exemption from the bag limits for South Atlantic snapper-grouper in or from the South Atlantic EEZ, to engage in the directed fishery for tilefish in the South Atlantic EEZ, to use a longline to fish for South Atlantic snapper-grouper in the South Atlantic EEZ, or to use a sea bass pot in the South Atlantic EEZ between 35°15.19' N. lat. (due east of Cape Hatteras Light, NC) and 28°35.1' N. lat. (due east of the NASA Vehicle Assembly Building, Cape Canaveral, FL), a commercial vessel permit for South Atlantic snapper-grouper must have been issued to the vessel and must be on board. A vessel with longline gear and more than 200 lb (90.7 kg) of tilefish on board is considered to be in the directed fishery for tilefish. It is a rebuttable presumption that a fishing vessel with more than 200 lb (90.7 kg) of tilefish on board harvested such tilefish in the EEZ. See §622.18 for limitations on the use, transfer, and renewal of a commercial vessel permit for South Atlantic snapper-grouper.

(vii) *Wreckfish.* For a person aboard a vessel to fish for wreckfish in the South Atlantic EEZ, possess wreckfish in or from the South Atlantic EEZ, offload wreckfish from the South Atlantic EEZ, or sell wreckfish in or from the South Atlantic EEZ, a commercial vessel permit for wreckfish must have been issued to the vessel and must be on board. To obtain a commercial vessel permit for wreckfish, the applicant must be a wreckfish shareholder; and either the shareholder must be the vessel owner or the owner or operator must be an employee, contractor, or agent of the shareholder. (See §622.15 for information on wreckfish shareholders.)

(viii) *South Atlantic rock shrimp.* (A) For a person aboard a vessel to fish for rock shrimp in the South Atlantic EEZ or possess rock shrimp in or from the South Atlantic EEZ, a commercial vessel permit for rock shrimp must be issued to the vessel and must be on board. (See paragraph (a)(5) of this section for the requirements for operator permits for the South Atlantic rock shrimp fishery.)

(B) In addition, for a person aboard a vessel to fish for rock shrimp in the South Atlantic EEZ off Georgia or off Florida or possess rock shrimp in or from the South Atlantic EEZ off Georgia or off Florida, a limited access endorsement for South Atlantic rock shrimp must be issued to the vessel and must be on board. See §622.19 for limitations on the issuance, transfer, renewal, and reissuance of a limited access endorsement for South Atlantic rock shrimp.

(ix) *Gulf red snapper IFQ vessel endorsement* . For a person aboard a vessel, for which a commercial vessel permit for Gulf reef fish has been issued, to fish for, possess, or land Gulf red snapper, regardless of where harvested or possessed, a Gulf red snapper IFQ vessel endorsement must have been issued to the vessel and must be on board. As a condition of the IFQ vessel endorsement issued under this paragraph (a)(2)(ix), a person aboard such vessel must comply with the requirements of §622.16 regardless of where red snapper are harvested or possessed. An owner of a vessel with a commercial vessel permit for Gulf reef fish can download an IFQ vessel endorsement from the NMFS IFQ website at *ifq.sero.nmfs.noaa.gov* . If such owner does not have an IFQ online account, the owner must first contact IFQ Customer Service at 1–866–425–7627 to obtain information necessary to access the IFQ website and establish an IFQ online account. There is no fee for obtaining this endorsement. The vessel endorsement remains valid as long as the vessel permit remains valid and the vessel owner is in compliance with all Gulf reef fish and Gulf red snapper IFQ reporting requirements, has paid all IFQ fees required under paragraph (c)(2) of this section, and is not subject to sanctions under 15 CFR part 904. The endorsement is not transferable. The provisions of this paragraph do not apply to fishing for or possession of Gulf red snapper under the bag limit specified in §622.39(b)(1)(iii). See §622.16 regarding other provisions pertinent to the Gulf red snapper IFQ system.

(x) *South Atlantic golden crab.* For a person aboard a vessel to fish for golden crab in the South Atlantic EEZ, possess golden crab in or from the South Atlantic EEZ, off-load golden crab from the South Atlantic EEZ, or sell golden crab in or from the South Atlantic EEZ, a commercial vessel permit for golden crab must be issued to the vessel and must be on board. It is a rebuttable presumption that a golden crab on board a vessel in the South Atlantic or off-loaded from a vessel in a port adjoining the South Atlantic was harvested from the South Atlantic EEZ. See §622.17 for limitations on the use, transfer, and renewal of a commercial vessel permit for golden crab.

(xi) *Gulf shrimp fisheries* —(A) *Gulf shrimp permit.* For a person aboard a vessel to fish for shrimp in the Gulf EEZ or possess shrimp in or from the Gulf EEZ, a commercial vessel permit for Gulf shrimp must have been issued to the vessel and must be on board. See paragraph (s) of this section regarding a moratorium on commercial vessel permits for Gulf shrimp and the associated provisions. See the following paragraph, (a)(2)(xi)(B) of this section, regarding an additional endorsement requirement related to royal red shrimp.

(B) *Gulf royal red shrimp endorsement.* Effective March 26, 2007, for a person aboard a vessel to fish for royal red shrimp in the Gulf EEZ or possess royal red shrimp in or from the Gulf EEZ, a commercial vessel permit for Gulf shrimp with a Gulf royal red shrimp endorsement must be issued to the vessel and must be on board.

(xii) *Atlantic dolphin and wahoo* . (A) For a person aboard a vessel to be eligible for exemption from the bag and possession limits for dolphin or wahoo in or from the Atlantic EEZ or to sell such dolphin or wahoo, a commercial vessel permit for Atlantic dolphin and wahoo must be issued to the vessel and must be on board, except as provided in paragraph (a)(2)(xii)(B) of this section. (See paragraph (a)(5) of this section for the requirements for operator permits in the Atlantic dolphin and wahoo fishery).

(B) The provisions of paragraph (a)(2)(xii)(A) of this section notwithstanding, a fishing vessel, except a vessel operating as a charter vessel or headboat, that does not have a commercial vessel permit for Atlantic dolphin and wahoo but has a Federal commercial vessel permit in any other fishery, is exempt from the bag and possession limits for dolphin and wahoo and may sell dolphin and wahoo, subject to the trip and geographical limits specified in §622.44(f)(2). (A charter vessel/headboat permit is not a commercial vessel permit.)

(xiii) *South Atlantic penaeid shrimp* . For a person aboard a trawler to fish for penaeid shrimp in the South Atlantic EEZ or possess penaeid shrimp in or from the South Atlantic EEZ, a valid commercial vessel permit for South Atlantic penaeid shrimp must have been issued to the vessel and must be on board.

(3) *Coral permits* —(i) *Allowable chemical.* For an individual to take or possess fish or other marine organisms with an allowable chemical in a coral area, other than fish or other marine organisms that are landed in Florida, a Federal allowable chemical permit must have been issued to the individual. Such permit must be available when the permitted activity is being conducted and when such fish or other marine organisms are possessed, through landing ashore.

(ii) *Allowable octocoral.* For an individual to take or possess allowable octocoral in the Gulf or South Atlantic EEZ, other than allowable octocoral that is landed in Florida, a Federal allowable octocoral permit must have been issued to the individual. Such permit must be available for inspection when the permitted activity is being conducted and when allowable octocoral is possessed, through landing ashore.

(iii) *Aquacultured live rock.* For a person to take or possess aquacultured live rock in the Gulf or South Atlantic EEZ, a Federal aquacultured live rock permit must have been issued for the specific harvest site. Such permit, or a copy, must be on board a vessel depositing or possessing material on an aquacultured live rock site or harvesting or possessing live rock from an aquacultured live rock site.

(iv) *Prohibited coral.* A Federal permit may be issued to take or possess Gulf and South Atlantic prohibited coral or Caribbean prohibited coral only as scientific research activity, exempted fishing, or exempted educational activity. See §600.745 of this chapter for the procedures and limitations for such activities and fishing.

(v) *Florida permits.* Appropriate Florida permits and endorsements are required for the following activities, without regard to whether they involve activities in the EEZ or Florida's waters:

(A) Landing in Florida fish or other marine organisms taken with an allowable chemical in a coral area.

(B) Landing allowable octocoral in Florida.

(C) Landing live rock in Florida.

(4) *Dealer permits, endorsements, and conditions* —(i) *Permits* . For a dealer to receive Gulf reef fish harvested from the Gulf EEZ; golden crab, South Atlantic snapper-grouper, rock shrimp, or wreckfish harvested from the South Atlantic EEZ; or dolphin or wahoo harvested from the Atlantic EEZ; a dealer permit for Gulf reef fish, golden crab, South Atlantic snapper-grouper, rock shrimp, wreckfish, or Atlantic dolphin and wahoo, respectively, must be issued to the dealer.

(ii) *Gulf red snapper IFQ dealer endorsement* . In addition to the requirement for a dealer permit for Gulf reef fish as specified in paragraph (a)(4)(i) of this section, for a dealer to receive Gulf red snapper subject to the Gulf red snapper IFQ program, as specified in §622.16(a)(1), or for a person aboard a vessel with a Gulf red snapper IFQ vessel endorsement to sell such red snapper directly to an entity other than a dealer, such persons must also have a Gulf red snapper IFQ dealer endorsement. A dealer with a Gulf reef fish dealer permit can download a Gulf red snapper IFQ dealer endorsement from the NMFS IFQ website at *ifq.sero.nmfs.noaa.gov* . If such persons do not have an IFQ online account, they must first contact IFQ Customer Service at 1–866–425–7627 to obtain information necessary to access the IFQ website and establish an IFQ online account. There is no fee for obtaining this endorsement. The endorsement remains valid as long as the Gulf reef fish dealer permit remains valid and the dealer is in compliance with all Gulf reef fish and Gulf red snapper IFQ reporting requirements, has paid all IFQ fees required under paragraph (c)(2) of this section, and is not subject to sanctions under 15 CFR part 904. The endorsement is not transferable. See §622.16 regarding other provisions pertinent to the Gulf red snapper IFQ system.

(iii) *State license and facility requirements* . To obtain a dealer permit or endorsement, the applicant must have a valid state wholesaler's license in the state(s) where the dealer operates, if required by such state(s), and must have a physical facility at a fixed location in such state(s).

(5) *Operator permits* . (i) The following persons are required to have operator permits:

(A) An operator of a vessel that has or is required to have a valid permit for South Atlantic rock shrimp issued under this section.

(B) An operator of a vessel that has or is required to have a charter vessel/headboat or commercial permit for Atlantic dolphin and wahoo issued under this section.

(ii) A person required to have an operator permit under paragraph (a)(5)(i) of this section must carry on board such permit and one other form of personal identification that includes a picture (driver's license, passport, etc.).

(iii) An owner of a vessel that is required to have a permitted operator under paragraph (a)(5)(i) of this section must ensure that at least one person with a valid operator permit is aboard while the vessel is at sea or offloading.

(iv) An owner of a vessel that is required to have a permitted operator under paragraph (a)(5)(i) of this section and the operator of such vessel are responsible for ensuring that a person whose operator permit is suspended, revoked, or modified pursuant to subpart D of 15 CFR part 904 is not aboard that vessel.

(b) *Applications for permits.* Application forms for all permits are available from the RA. Completed application forms and all required supporting documents must be submitted to the RA at least 30 days prior to the date on which the applicant desires to have the permit made effective. All vessel permits are mailed to owners, whether the applicant is an owner or an operator.

(1) *Coral permits.* (i) The applicant for a coral permit must be the individual who will be conducting the activity that requires the permit. In the case of a corporation or partnership that will be conducting live rock aquaculture activity, the applicant must be the principal shareholder or a general partner.

(ii) An applicant must provide the following:

(A) Name, address, telephone number, and other identifying information of the applicant.

(B) Name and address of any affiliated company, institution, or organization.

(C) Information concerning vessels, harvesting gear/methods, or fishing areas, as specified on the application form.

(D) Any other information that may be necessary for the issuance or administration of the permit.

(E) If applying for an aquacultured live rock permit, identification of each vessel that will be depositing material on or harvesting aquacultured live rock from the proposed aquacultured live rock site, specification of the port of landing of aquacultured live rock, and a site evaluation report prepared pursuant to generally accepted industry standards that—

(*1*) Provides accurate coordinates of the proposed harvesting site so that it can be located using LORAN or Global Positioning System equipment;

(*2*) Shows the site on a chart in sufficient detail to determine its size and allow for site inspection;

(*3*) Discusses possible hazards to safe navigation or hindrance to vessel traffic, traditional fishing operations, or other public access that may result from aquacultured live rock at the site;

(*4*) Describes the naturally occurring bottom habitat at the site; and

(*5*) Specifies the type and origin of material to be deposited on the site and how it will be distinguishable from the naturally occurring substrate.

(2) *Dealer permits.* (i) The application for a dealer permit must be submitted by the owner (in the case of a corporation, an officer or shareholder; in the case of a partnership, a general partner).

(ii) An applicant must provide the following:

(A) A copy of each state wholesaler's license held by the dealer.

(B) Name, address, telephone number, date the business was formed, and other identifying information of the business.

(C) The address of each physical facility at a fixed location where the business receives fish.

(D) Name, address, telephone number, other identifying information, and official capacity in the business of the applicant.

(E) Any other information that may be necessary for the issuance or administration of the permit, as specified on the application form.

(3) *Vessel permits.* (i) The application for a commercial vessel permit, other than for wreckfish, or for a charter vessel/headboat permit must be submitted by the owner (in the case of a corporation, an officer or shareholder; in the case of a partnership, a general partner) or operator of the vessel. A commercial vessel permit that is issued based on the earned income qualification of an operator is valid only when that person is the operator of the vessel. The applicant for a commercial vessel permit for wreckfish must be a wreckfish shareholder.

(ii) An applicant must provide the following:

(A) A copy of the vessel's valid USCG certificate of documentation or, if not documented, a copy of its valid state registration certificate.

(B) Vessel name and official number.

(C) Name, address, telephone number, and other identifying information of the vessel owner and of the applicant, if other than the owner.

(D) Any other information concerning the vessel, gear characteristics, principal fisheries engaged in, or fishing areas, as specified on the application form.

(E) Any other information that may be necessary for the issuance or administration of the permit, as specified on the application form.

(F) If applying for a commercial vessel permit, documentation, as specified in the instructions accompanying each application form, showing that applicable eligibility requirements of paragraph (a)(2) of this section have been met.

(G) If a sea bass pot will be used, the number, dimensions, and estimated cubic volume of the pots that will be used and the applicant's desired color code for use in identifying his or her vessel and buoys (white is not an acceptable color code).

(4) *Operator permits.* An applicant for an operator permit must provide the following:

(i) Name, address, telephone number, and other identifying information specified on the application.

(ii) Two recent (no more than 1–yr old), color, passport-size photographs.

(iii) Any other information that may be necessary for the issuance or administration of the permit, as specified on the application form.

(c) *Change in application information.* The owner or operator of a vessel with a permit, a person with a coral permit, a person with an operator permit, or a dealer with a permit must notify the RA within 30 days after any change in the application information specified in paragraph (b) of this section. The permit is void if any change in the information is not reported within 30 days.

(d) *Fees.* Unless specified otherwise, a fee is charged for each application for a permit, license, or endorsement submitted under this section, for each request for transfer or replacement of such permit, license, or endorsement, and for each sea bass pot identification tag required under §622.6(b)(1)(i)(B). The amount of each fee is calculated in accordance with the procedures of the NOAA Finance Handbook, available from the RA, for determining the administrative costs of each special product or service. The fee may not exceed such costs and is specified with each application form. The appropriate fee must accompany each application, request for transfer or replacement, or request for sea bass pot identification tags.

(e) *Initial issuance.* (1) The RA will issue an initial permit at any time to an applicant if the application is complete and the specific requirements for the requested permit have been met. An application is complete when all requested forms, information, and documentation have been received.

(2) Upon receipt of an incomplete application, the RA will notify the applicant of the deficiency. If the applicant fails to correct the deficiency within 30 days of the date of the RA's letter of notification, the application will be considered abandoned.

(f) *Duration.* A permit remains valid for the period specified on it unless it is revoked, suspended, or modified pursuant to subpart D of 15 CFR part 904 or, in the case of a vessel or dealer permit, the vessel or dealership is sold.

(g) *Transfer* —(1) *Vessel permits, licenses, and endorsements and dealer permits* . A vessel permit, license, or endorsement or a dealer permit or endorsement issued under this section is not transferable or assignable, except as provided in paragraph (m) of this section for a commercial vessel permit for Gulf reef fish, in paragraph (o) of this section for a king mackerel gillnet permit, in paragraph (q) of this section for a commercial vessel permit for king mackerel, in paragraph (r) of this section for a charter vessel/headboat permit for Gulf coastal migratory pelagic fish or Gulf reef fish, in paragraph (s) of this section for a commercial vessel moratorium permit for Gulf shrimp, in §622.17(c) for a commercial vessel permit for golden crab, in §622.18(b) for a commercial vessel permit for South Atlantic snapper-grouper, or in §622.19(b) for a commercial vessel permit for South Atlantic rock shrimp. A person who acquires a vessel or dealership who desires to conduct activities for which a permit, license, or endorsement is required must apply for a permit, license, or endorsement in accordance with the provisions of this section and other applicable sections of this part. If the acquired vessel or dealership is currently permitted, the application must be accompanied by the original permit and a copy of a signed bill of sale or equivalent acquisition papers. In those cases where a permit, license, or endorsement is transferable, the seller must sign the back of the permit, license, or endorsement and have the signed transfer document notarized.

(2) *Operator permits.* An operator permit is not transferable.

(h) *Renewal* —(1) *Vessel permits, licenses, and endorsements and dealer permits.* Unless specified otherwise, a vessel owner or dealer who has been issued a permit, license, or endorsement under this section must renew such permit, license, or endorsement on an annual basis. The RA will mail a vessel owner or dealer whose permit, license, or endorsement is expiring an application for renewal approximately 2 months prior to the expiration date. A vessel owner or dealer who does not receive a renewal application from the RA by 45 days prior to the expiration date of the permit, license, or endorsement must contact the RA and request a renewal application. The applicant must submit a completed renewal application form and all required supporting documents to the RA prior to the applicable deadline for renewal of the permit, license, or endorsement and at least 30 days prior to the date on which the applicant desires to have the permit made effective. If the RA receives an incomplete application, the RA will

notify the applicant of the deficiency. If the applicant fails to correct the deficiency within 30 days of the date of the RA's letter of notification, the application will be considered abandoned. A permit, license, or endorsement that is not renewed within the applicable deadline will not be reissued.

(2) *Operator permits.* An operator permit required by this section is issued for a period not longer than 3 years. A permit not renewed immediately upon its expiration would expire at the end of the operator's birth month that is between 2 and 3 years after issuance. For renewal, a new application must be submitted in accordance with paragraph (b)(4) of this section.

(i) *Display.* A vessel permit, license, or endorsement issued under this section must be carried on board the vessel. A dealer permit issued under this section, or a copy thereof, must be available on the dealer's premises. In addition, a copy of the dealer's permit must accompany each vehicle that is used to pick up from a fishing vessel reef fish harvested from the Gulf EEZ. The operator of a vessel must present the vessel permit, license, or endorsement for inspection upon the request of an authorized officer. A dealer or a vehicle operator must present the permit or a copy for inspection upon the request of an authorized officer. An operator of a vessel in a fishery in which an operator permit is required must present his/her operator permit and one other form of personal identification that includes a picture (driver's license, passport, etc.) for inspection upon the request of an authorized officer.

(j) *Sanctions and denials.* (1) A permit, license, or endorsement issued pursuant to this section may be revoked, suspended, or modified, and a permit, license, or endorsement application may be denied, in accordance with the procedures governing enforcement-related permit sanctions and denials found at subpart D of 15 CFR part 904.

(2) A person whose operator permit is suspended, revoked, or modified may not be aboard any fishing vessel subject to Federal fishing regulations in any capacity, if so sanctioned by NOAA, while the vessel is at sea or offloading. The vessel's owner and operator are responsible for compliance with this measure. A list of operators whose permits are revoked or suspended may be obtained from the RA.

(k) *Alteration.* A permit, license, or endorsement that is altered, erased, or mutilated is invalid.

(l) *Replacement.* A replacement permit, license, or endorsement may be issued. An application for a replacement permit, license, or endorsement is not considered a new application. An application for a replacement operator permit must include two new photographs, as specified in paragraph (b)(4)(ii) of this section.

(m) *Limited access system for commercial vessel permits for Gulf reef fish.* (1) No applications for additional commercial vessel permits for Gulf reef fish will be accepted. Existing vessel permits may be renewed, are subject to the restrictions on transfer or change in paragraphs (m)(2) through (5) of this section, and are subject to the requirement for timely renewal in paragraph (m)(6) of this section. An application for renewal or transfer of a commercial vessel permit for Gulf reef fish will not be considered complete until proof of purchase, installation, activation, and operational status of an approved VMS for the vessel receiving the permit has been verified by NMFS VMS personnel.

(2) An owner of a permitted vessel may transfer the commercial vessel permit for Gulf reef fish to another vessel owned by the same entity.

(3) An owner whose earned income qualified for the commercial vessel permit for Gulf reef fish may transfer the permit to the owner of another vessel, or to the new owner when he or she transfers ownership of the permitted vessel. Such owner of another vessel, or new owner, may receive a commercial vessel permit for Gulf reef fish for his or her vessel, and renew it through April 15 following the first full calendar year after obtaining it, without meeting the earned income requirement of paragraph (a)(2)(v) of this section. However, to further renew the commercial vessel permit, the owner of the other vessel, or new owner, must meet the earned income requirement not later than the first full calendar year after the permit transfer takes place.

(4) An owner of a permitted vessel, the permit for which is based on an operator's earned income and, thus, is valid only when that person is the operator of the vessel, may transfer the permit to the income qualifying operator when such operator becomes an owner of a vessel.

(5) An owner of a permitted vessel, the permit for which is based on an operator's earned income and, thus, is valid only when that person is the operator of the vessel, may have the operator qualification on the permit removed, and renew it without such qualification through April 15 following the first full calendar year after removing it, without meeting the earned income requirement of paragraph (a)(2)(v) of this section. However, to further renew the commercial vessel permit, the owner must meet the earned income requirement not later than the first full calendar year after the operator qualification is removed. To have an operator qualification removed from a permit, the owner must return the original permit to the RA with an application for the changed permit.

(6) A commercial vessel permit for Gulf reef fish that is not renewed or that is revoked will not be reissued. A permit is considered to be not renewed when an application for renewal is not received by the RA within 1 year of the expiration date of the permit.

(n) [Reserved]

(o) *Limited access system for king mackerel gillnet permits applicable in the southern Florida west coast subzone.* Except for applications for renewals of king mackerel gillnet permits, no applications for king mackerel gillnet permits will be accepted. Application forms for permit renewal are available from the RA.

(1) An owner of a vessel with a king mackerel gillnet permit issued under this limited access system may transfer that permit upon a change of ownership of a permitted vessel with such permit from one to another of the following: Husband, wife, son, daughter, brother, sister, mother, or father. Such permit also may be transferred to another vessel owned by the same entity.

(2) A king mackerel gillnet permit that is not renewed or that is revoked will not be reissued. A permit is considered to be not renewed when an application for renewal is not received by the RA within one year after the expiration date of the permit.

(1)–(6) [Reserved]

(q) *Limited access system for commercial vessel permits for king mackerel.* (1) No applications for additional commercial vessel permits for king mackerel will be accepted. Existing vessel permits may be renewed, are subject to the restrictions on transfer or change in paragraphs (q)(2) through (q)(5) of this section, and are subject to the requirement for timely renewal in paragraph (q)(6) of this section.

(2) An owner of a permitted vessel may transfer the commercial vessel permit for king mackerel issued under this limited access system to another vessel owned by the same entity.

(3) An owner whose percentage of earned income or gross sales qualified him/her for the commercial vessel permit for king mackerel issued under this limited access system may request that NMFS transfer that permit to the owner of another vessel, or to the new owner when he or she transfers ownership of the permitted vessel. Such owner of another vessel, or new owner, may receive a commercial vessel permit for king mackerel for his or her vessel, and renew it through April 15 following the first full calendar year after obtaining it, without meeting the percentage of earned income or gross sales requirement of paragraph (a)(2)(iii) of this section. However, to further renew the commercial vessel permit, the owner of the other vessel, or new owner, must meet the earned income or gross sales requirement not later than the first full calendar year after the permit transfer takes place.

(4) An owner of a permitted vessel, the permit for which is based on an operator's earned income and, thus, is valid only when that person is the operator of the vessel, may request that NMFS transfer the permit to the income-qualifying operator when such operator becomes an owner of a vessel.

(5) An owner of a permitted vessel, the permit for which is based on an operator's earned income and, thus, is valid only when that person is the operator of the vessel, may have the operator qualification on the permit removed, and renew it without such qualification through April 15 following the first full calendar year after removing it, without meeting the earned income or gross sales requirement of paragraph (a)(2)(iii) of this section. However, to further renew the commercial vessel permit, the owner must meet the earned income or gross sales requirement not later than the first full calendar year after the operator qualification is removed. To have an operator qualification removed from a permit, the owner must return the original permit to the RA with an application for the changed permit.

(6) NMFS will not reissue a commercial vessel permit for king mackerel if the permit is revoked or if the RA does not receive an application for renewal within one year of the permit's expiration date.

(r) *Limited access system for charter vessel/headboat permits for Gulf coastal migratory pelagic fish and Gulf reef fish.* No applications for additional charter vessel/headboat permits for Gulf coastal migratory pelagic fish or Gulf reef fish will be accepted. Existing permits may be renewed, are subject to the restrictions on transfer in paragraph (r)(1) of this section, and are subject to the renewal requirements in paragraph (r)(2) of this section.

(1) *Transfer of permits* —(i) *Permits without a historical captain endorsement.* A charter vessel/headboat permit for Gulf coastal migratory pelagic fish or Gulf reef fish that does not have a historical captain endorsement is fully transferable, with or without sale of the permitted vessel, except that no transfer is allowed to a vessel with a greater authorized passenger capacity than that of the vessel to which the moratorium permit was originally issued, as specified on the face of the permit being transferred. An application to transfer a permit to an inspected vessel must include a copy of that vessel's current USCG Certificate of Inspection (COI). A vessel without a valid COI will be considered an uninspected vessel with an authorized passenger capacity restricted to six or fewer passengers.

(ii) *Permits with a historical captain endorsement.* A charter vessel/headboat permit for Gulf coastal migratory pelagic fish or Gulf reef fish that has a historical captain endorsement may only be transferred to a vessel operated by the historical captain, cannot be transferred to a vessel with a greater authorized passenger capacity than that of the vessel to which the moratorium permit was originally issued, as specified on the face of the permit being transferred, and is not otherwise transferable.

(iii) *Procedure for permit transfer.* To request that the RA transfer a charter vessel/headboat permit for Gulf coastal migratory pelagic fish or Gulf reef fish, the owner of the vessel who is transferring the permit and the owner of the vessel that is to receive the transferred permit must complete the transfer information on the reverse side of the permit and return the permit and a completed application for transfer to the RA. See paragraph (g)(1) of this section for additional transfer-related requirements applicable to all permits issued under this section.

(2) *Renewal.* (i) Renewal of a charter vessel/headboat permit for Gulf coastal migratory pelagic fish or Gulf reef fish is contingent upon the permitted vessel and/or captain, as appropriate, being included in an active survey frame for, and, if selected to report, providing the information required in one of the approved fishing data surveys. Surveys include, but are not limited to—

(A) NMFS' Marine Recreational Fishing Vessel Directory Telephone Survey (conducted by the Gulf States Marine Fisheries Commission);

(B) NMFS' Southeast Headboat Survey (as required by §622.5(b)(1);

(C) Texas Parks and Wildlife Marine Recreational Fishing Survey; or

(D) A data collection system that replaces one or more of the surveys in paragraph (r)(2)(i)(A),(B), or (C) of this section.

(ii) A charter vessel/headboat permit for Gulf coastal migratory pelagic fish or Gulf reef fish that is not renewed or that is revoked will not be reissued. A permit is considered to be not renewed when an application for renewal, as required, is not received by the RA within 1 year of the expiration date of the permit.

(3) *Requirement to display a vessel decal.* Upon renewal or transfer of a charter vessel/headboat permit for Gulf coastal migratory pelagic fish or Gulf reef fish, the RA will issue the owner of the permitted vessel a vessel decal for the applicable permitted fishery or fisheries. The vessel decal must be displayed on the port side of the deckhouse or hull and must be maintained so that it is clearly visible.

(s) *Moratorium on commercial vessel permits for Gulf shrimp.* The provisions of this paragraph (s) are applicable through October 26, 2016.

(1) *Date moratorium permits are required.* Beginning March 26, 2007, the only valid commercial vessel permits for Gulf shrimp are those issued under the moratorium criteria in this paragraph (s).

(2) *Initial eligibility for a moratorium permit.* Initial eligibility for a commercial vessel moratorium permit for Gulf shrimp is limited to a person who

(i) Owns a vessel that was issued a Federal commercial vessel permit for Gulf shrimp on or before December 6, 2003; or

(ii) On or before December 6, 2003, owned a vessel that was issued a Federal commercial vessel permit for Gulf shrimp and, prior to September 26, 2006, owns a vessel with a Federal commercial permit for Gulf shrimp that is equipped for offshore shrimp fishing, is at least 5 net tons (4.54 metric tons), is documented by the Coast Guard, and is the vessel for which the commercial vessel moratorium permit is being applied.

(3) *Application deadline and procedures.* An applicant who desires a commercial vessel moratorium permit for Gulf shrimp must submit an application to the RA postmarked or hand delivered not later than October 26, 2007. After that date, no applications for additional commercial vessel moratorium permits for Gulf shrimp will be accepted. Application forms are available from the RA. Failure to apply in a timely manner will preclude permit issuance even when the applicant otherwise meets the permit eligibility criteria.

(4) *Determination of eligibility.* NMFS' permit records are the sole basis for determining eligibility based on permit history. An applicant who believes he/she meets the permit eligibility criteria based on ownership of a vessel under a different name, as may have occurred when ownership has changed from individual to corporate or vice versa, must document his/her continuity of ownership.

(5) *Incomplete applications.* If an application that is postmarked or hand-delivered in a timely manner is incomplete, the RA will notify the applicant of the deficiency. If the applicant fails to correct the deficiency within 30 days of the date of the RA's notification, the application will be considered abandoned.

(6) *Notification of ineligibility.* If the applicant does not meet the applicable eligibility requirements of paragraph (s)(2) of this section, the RA will notify the applicant, in writing, of such determination and the reasons for it.

(7) *Permit transferability.* Commercial vessel moratorium permits for Gulf shrimp are fully transferable, with or without the sale of the vessel. To request that the RA transfer a commercial vessel moratorium permit for Gulf shrimp, the owner of a vessel that is to receive the transferred permit must complete the transfer information on the reverse of the permit and return the permit and a completed application for transfer to the RA. Transfer documents must be notarized as specified in paragraph (g)(1) of this section.

(8) *Renewal.* (i) Renewal of a commercial vessel moratorium permit for Gulf shrimp is contingent upon compliance with the recordkeeping and reporting requirements for Gulf shrimp specified in §622.5(a)(1)(iii).

(ii) A commercial vessel moratorium permit for Gulf shrimp that is not renewed will be terminated and will not be reissued during the moratorium. A permit is considered to be not renewed when an application for renewal, as required, is not received by the RA within 1 year of the expiration date of the permit.

[61 FR 34937, July 3, 1996]

Editorial Note: For Federal Register citations affecting §622.4, see the List of CFR Sections Affected, which appears in the Finding Aids section of the printed volume and on GPO Access.

Title 50: Wildlife and Fisheries
PART 622—FISHERIES OF THE CARIBBEAN, GULF, AND SOUTH ATLANTIC
Subpart A—General Provisions

§ 622.5 Recordkeeping and reporting.

Participants in fisheries governed in this part are required to keep records and report as follows.

(a) *Commercial vessel owners and operators* —(1) *Requirements by species* —(i) *Coastal migratory pelagic fish.* The owner or operator of a vessel that fishes for or lands coastal migratory pelagic fish for sale in or from the Gulf, Mid-Atlantic, or South Atlantic EEZ or adjoining state waters, or whose vessel is issued a commercial permit for king or Spanish mackerel, as required under §622.4(a)(2)(iii) or (iv), who is selected to report by the SRD, must maintain a fishing record on a form available from the SRD and must submit such record as specified in paragraph (a)(2) of this section.

(ii) *Gulf reef fish.* The owner or operator of a vessel for which a commercial permit for Gulf reef fish has been issued, as required under §622.4(a)(2)(v), or whose vessel fishes for or lands reef fish in or from state waters adjoining the Gulf EEZ, who is selected to report by the SRD must maintain a fishing record on a form available from the SRD and must submit such record as specified in paragraph (a)(2) of this section.

(iii) *Gulf shrimp* —(A) *General reporting requirement.* The owner or operator of a vessel that fishes for shrimp in the Gulf EEZ or in adjoining state waters, or that lands shrimp in an adjoining state, must provide information for any fishing trip, as requested by the SRD, including, but not limited to, vessel identification, gear, effort, amount of shrimp caught by species, shrimp condition (heads on/heads off), fishing areas and depths, and person to whom sold.

(B) *Electronic logbook reporting.* The owner or operator of a vessel for which a Federal commercial vessel permit for Gulf shrimp has been issued and who is selected by the SRD must participate in the NMFS-sponsored electronic logbook reporting program as directed by the SRD. In addition, such owner or operator must provide information regarding the size and number of shrimp trawls deployed and the type of BRD and turtle excluder device used, as directed by the SRD. Compliance with the reporting requirements of this paragraph (a)(1)(iii)(B) is required for permit renewal.

(C) *Vessel and Gear Characterization Form.* All owners or operators of vessels applying for or renewing a commercial vessel moratorium permit for Gulf shrimp must complete an annual Gulf Shrimp Vessel and Gear Characterization Form. The form will be provided by NMFS at the time of permit application and renewal. Compliance with this reporting requirement is required for permit issuance and renewal.

(D) *Landings report.* The owner or operator of a vessel for which a Federal commercial vessel permit for Gulf shrimp has been issued must annually report the permitted vessel's total annual landings of shrimp and value, by species, on a form provided by the SRD. Compliance with this reporting requirement is required for permit renewal.

(iv) *South Atlantic snapper-grouper.* (A) The owner or operator of a vessel for which a commercial permit for South Atlantic snapper-grouper has been issued, as required under §622.4(a)(2)(vi), or whose vessel fishes for or lands South Atlantic snapper-grouper in or from state waters adjoining the South Atlantic EEZ, who is selected to report by the SRD must maintain a fishing record on a form available from the SRD and must submit such record as specified in paragraph (a)(2) of this section.

(B) The wreckfish shareholder under §622.15, or operator of a vessel for which a commercial permit for wreckfish has been issued, as required under §622.4(a)(2)(vii), must maintain a fishing record on a form available from the SRD and must submit such record as specified in paragraph (a)(2) of this section.

(C) The wreckfish shareholder under §622.15, or operator of a vessel for which a commercial permit for wreckfish has been issued, as required under §622.4(a)(2)(vii), must make available to an authorized officer upon request all records of offloadings, purchases, or sales of wreckfish.

(v) *South Atlantic golden crab.* The owner or operator of a vessel for which a commercial permit for golden crab has been issued, as required under §622.4(a)(2)(x), who is selected to report by the SRD must maintain a fishing record on a form available from the SRD.

(vi) *Atlantic dolphin and wahoo* . The owner or operator of a vessel for which a commercial permit for Atlantic dolphin and wahoo has been issued, as required under §622.4 (a)(2)(xii), or whose vessel fishes for or lands Atlantic dolphin or wahoo in or from state waters adjoining the Atlantic EEZ, who is selected to report by the SRD must maintain a fishing record on a form available from the SRD and must submit such record as specified in paragraph (a)(2) of this section.

(vii) *South Atlantic rock or penaeid shrimp* . The owner or operator of a vessel for which a commercial permit for South Atlantic rock shrimp or South Atlantic penaeid shrimp has been issued, as required under §622.4(a)(2)(viii) or (xiii), respectively, or whose vessel fishes for or lands South Atlantic rock shrimp or South Atlantic penaeid shrimp in or from state waters adjoining the Atlantic EEZ, who is selected to report by the SRD must maintain a fishing record on a form available from the SRD and must submit such record as specified in paragraph (a)(2) of this section.

(2) *Reporting deadlines* . (i) Completed fishing records required by paragraphs (a)(1)(i), (ii), (iv), (vi), and (vii) of this section must be submitted to the SRD postmarked not later than 7 days after the end of each fishing trip. If no fishing occurred during a calendar month, a report so stating must be submitted on one of the forms postmarked not later than 7 days after the end of that month. Information to be reported is indicated on the form and its accompanying instructions.

(ii) Reporting forms required in paragraph (a)(1)(v) of this section must be submitted to the SRD postmarked not later than 30 days after sale of the golden crab offloaded from a trip. If no fishing occurred during a calendar month, a report so stating must be submitted on one of the forms postmarked not later than 7 days after the end of that month. Information to be reported is indicated on the form and its accompanying instructions.

(b) *Charter vessel/headboat owners and operators* —(1) *Coastal migratory pelagic fish, reef fish, snapper-grouper, and Atlantic dolphin and wahoo.* The owner or operator of a vessel for which a charter vessel/headboat permit for Gulf coastal migratory pelagic fish, South Atlantic coastal migratory pelagic fish, Gulf reef fish, South Atlantic snapper-grouper, or Atlantic dolphin and wahoo has been issued, as required under §622.4(a)(1), or whose vessel fishes for or lands such coastal migratory pelagic fish, reef fish, snapper-grouper, or Atlantic dolphin or wahoo in or from state waters adjoining the applicable Gulf, South Atlantic, or Atlantic EEZ, who is selected to report by the SRD must maintain a fishing record for each trip, or a portion of such trips as specified by the SRD, on forms provided by the SRD and must submit such record as specified in paragraph (b)(2) of this section.

(2) *Reporting deadlines* —(i) *Charter vessels.* Completed fishing records required by paragraph (b)(1) of this section for charter vessels must be submitted to the SRD weekly, postmarked not later than 7 days after the end of each week (Sunday). Information to be reported is indicated on the form and its accompanying instructions.

(ii) *Headboats.* Completed fishing records required by paragraph (b)(1) of this section for headboats must be submitted to the SRD monthly and must either be made available to an authorized statistical reporting agent or be postmarked not later than 7 days after the end of each month. Information to be reported is indicated on the form and its accompanying instructions.

(c) *Dealers* —(1) *Coastal migratory pelagic fish.* (i) A person who purchases coastal migratory pelagic fish from a fishing vessel, or person, that fishes for or lands such fish in or from the EEZ or adjoining state waters who is selected to report by the SRD must submit information on forms provided by the SRD. This information must be submitted to the SRD at monthly intervals, postmarked not later than 5 days after the end of each month. Reporting frequency and reporting deadlines may be modified upon notification by the SRD. If no coastal migratory pelagic fish were received during a calendar month, a report so stating must be submitted on one of the forms, in accordance with the instructions on the form, and must be postmarked not later than 5 days after the end of the month. The information to be reported is as follows:

(A) Dealer's or processor's name and address.

(B) County where fish were landed.

(C) Total poundage of each species received during that month, or other requested interval.

(D) Average monthly price paid for each species.

(E) Proportion of total poundage landed by each gear type.

(ii) *Alternate SRD.* For the purposes of paragraph (c)(1)(i) of this section, in the states from New York through Virginia, or in the waters off those states, “SRD” means the Science and Research Director, Northeast Fisheries Science Center, NMFS (see Table 1 of §600.502 of this chapter), or a designee.

(2) *Gulf red drum.* A dealers or processor who purchases red drum harvested from the Gulf who is selected to report by the SRD must report to the SRD such information as the SRD may request and in the form and manner as the SRD may require. The information required to be submitted must include, but is not limited to, the following:

(i) Dealer's or processor's name and address.

(ii) State and county where red drum were landed.

(iii) Total poundage of red drum received during the reporting period, by each type of gear used for harvest.

(3) *Gulf reef fish.* A person who purchases Gulf reef fish from a fishing vessel, or person, that fishes for or lands such fish in or from the EEZ or adjoining state waters must maintain records and submit information as follows:

(i) A dealer must maintain at his/her principal place of business a record of Gulf reef fish that he/she receives. The record must contain the name of each fishing vessel from which reef fish were received and the date, species, and quantity of each receipt. A dealer must retain such record for at least 1 year after receipt date and must provide such record for inspection upon the request of an authorized officer or the SRD.

(ii) When requested by the SRD, a dealer must provide information from his/her record of Gulf reef fish received the total poundage of each species received during the month, average monthly price paid for each species by market size, and proportion of total poundage landed by each gear type. This information must be provided on forms available from the SRD and must be submitted to the SRD at monthly intervals, postmarked not later than 5 days after the end of the month. Reporting frequency and reporting deadlines may be modified upon notification by the SRD. If no reef fish were received during a calendar month, a report so stating must be submitted on one of the forms, postmarked not later than 5 days after the end of the month.

(iii) The operator of a car or truck that is used to pick up from a fishing vessel reef fish harvested from the Gulf must maintain a record containing the name of each fishing vessel from which reef fish on the car or truck have been received. The vehicle operator must provide such record for inspection upon the request of an authorized officer.

(4) *Gulf shrimp.* A person who purchases shrimp from a vessel, or person, that fishes for shrimp in the Gulf EEZ or in adjoining state waters, or that lands shrimp in an adjoining state, must provide the following information when requested by the SRD:

(i) Name and official number of the vessel from which shrimp were received or the name of the person from whom shrimp were received, if received from other than a vessel.

(ii) Amount of shrimp received by species and size category for each receipt.

(iii) Exvessel value, by species and size category, for each receipt.

(5) *South Atlantic snapper-grouper.* (i) A person who purchases South Atlantic snapper-grouper that were harvested from the EEZ or from adjoining state waters and who is selected to report by the SRD and a dealer who has been issued a dealer permit for wreckfish, as required under §622.4(a)(4), must provide information on receipts of South Atlantic snapper-grouper and prices paid, by species, on forms available from the SRD. The required information must be submitted to the SRD at monthly intervals, postmarked not later than 5 days after the end of the month. Reporting frequency and reporting deadlines may be modified upon notification by the SRD. If no South Atlantic snapper-grouper were received during a calendar month, a report so stating must be submitted on one of the forms, postmarked not later than 5 days after the end of the month. However, during complete months encompassed by the wreckfish spawning-season closure (that is, February and March), a wreckfish dealer is not required to submit a report stating that no wreckfish were received.

(ii) A dealer reporting South Atlantic snapper-grouper other than wreckfish may submit the information required in paragraph (c)(5)(i) of this section via facsimile (fax).

(iii) A dealer who has been issued a dealer permit for wreckfish, as required under §622.4(a)(4), must make available to an authorized officer upon request all records of offloadings, purchases, or sales of wreckfish.

(6) *South Atlantic golden crab.* A dealer who receives from a fishing vessel golden crab harvested from the South Atlantic EEZ and who is selected by the SRD must provide information on receipts of, and prices paid for, South Atlantic golden crab to the SRD at monthly intervals, postmarked not later than 5 days after the end of each month. Reporting frequency and reporting deadlines may be modified upon notification by the SRD.

(7) *South Atlantic rock shrimp.* (i) A dealer who has been issued a permit for rock shrimp, as required under §622.4(a)(4), and who is selected by the SRD must provide information on receipts of rock shrimp and prices paid on forms available from the SRD. The required information must be submitted to the SRD at monthly intervals postmarked not later than 5 days after the end of each month. Reporting frequencies and reporting deadlines may be modified upon notification by the SRD.

(ii) On demand, a dealer who has been issued a dealer permit for rock shrimp, as required under §622.4(a)(4), must make available to an authorized officer all records of offloadings, purchases, or sales of rock shrimp.

(8) *Atlantic dolphin and wahoo.* (i) A dealer who has been issued a permit for Atlantic dolphin and wahoo, as required under §622.4(a)(4), and who is selected by the SRD must provide information on receipts of Atlantic dolphin and wahoo and prices paid on forms available from the SRD. The required information must be submitted to the SRD at monthly intervals postmarked not later than 5 days after the end of each month. Reporting frequencies and reporting deadlines may be modified upon notification by the SRD.

(ii) For the purposes of paragraph (c)(8)(i) of this section, in the states from Maine through Virginia, or in the waters off those states, “SRD” means the Science and Research Director, Northeast Fisheries Science Center, NMFS, (see Table 1 of §600.502 of this chapter), or a designee.

(iii) On demand, a dealer who has been issued a dealer permit for Atlantic dolphin and wahoo, as required under §622.4(a)(4), must make available to an authorized officer all records of offloadings, purchases, or sales of dolphin and wahoo.

(d) *Individuals with coral or live rock permits.* (1) An individual with a Federal allowable octocoral permit must submit a report of harvest to the SRD. Specific reporting requirements will be provided with the permit.

(2) A person with a Federal aquacultured live rock permit must report to the RA each deposition of material on a site. Such reports must be postmarked not later than 7 days after deposition and must contain the following information:

(i) Permit number of site and date of deposit.

(ii) Geological origin of material deposited.

(iii) Amount of material deposited.

(iv) Source of material deposited, that is, where obtained, if removed from another habitat, or from whom purchased.

(3) A person who takes aquacultured live rock must submit a report of harvest to the RA. Specific reporting requirements will be provided with the permit. This reporting requirement is waived for aquacultured live rock that is landed in Florida.

(e) *Additional data and inspection.* Additional data will be collected by authorized statistical reporting agents and by authorized officers. A person who fishes for or possesses species in or from the EEZ governed in this part is required to make the applicable fish or parts thereof available for inspection by the SRD or an authorized officer upon request.

(f) *Commercial vessel, charter vessel, and headboat inventory.* The owner or operator of a commercial vessel, charter vessel, or headboat operating in a fishery governed in this part who is not selected to report by the SRD under paragraph (a) or (b) of this section must provide the following information when interviewed by the SRD:

(1) Name and official number of vessel and permit number, if applicable.

(2) Length and tonnage.

(3) Current home port.

(4) Fishing areas.

(5) Ports where fish were offloaded during the last year.

(6) Type and quantity of gear.

(7) Number of full- and part-time fishermen or crew members.

[61 FR 34940, July 3, 1996, as amended at 61 FR 43956, Aug. 27, 1996; 61 FR 47448, Sept. 9, 1996; 63 FR 10567, Mar. 4, 1998; 63 FR 57590, Oct. 28, 1998; 64 FR 59126, Nov. 2, 1999; 64 FR 68935, Dec. 9, 1999; 67 FR 43565, June 28, 2002; 69 FR 30241, May 27, 2004; 70 FR 73387, Dec. 12, 2005; 71 FR 56047, Sept. 26, 2006; 73 FR 410, Jan. 3, 2008]

federal register

Friday
May 1, 1998

Part II

Department of Commerce

National Oceanic and Atmospheric Administration

50 CFR Part 600

Magnuson-Stevens Act Provisions; National Standard Guidelines; Final Rule

DEPARTMENT OF COMMERCE

National Oceanic and Atmospheric Administration

50 CFR Part 600

[Docket No. 970708168–8073–02; I.D. 061697B]

RIN 0648–AJ58

Magnuson-Stevens Act Provisions; National Standard Guidelines

AGENCY: National Marine Fisheries Service (NMFS), National Oceanic and Atmospheric Administration (NOAA), Commerce.

ACTION: Final rule.

SUMMARY: NMFS revises guidelines for national standards 1 (optimum yield), 2 (scientific information), 4 (allocations), 5 (efficiency), and 7 (costs and benefits); and adds guidelines for new national standards 8 (communities), 9 (bycatch), and 10 (safety of life at sea). The guidelines are intended to assist in the development and review of Fishery Management Plans (FMPs), amendments, and regulations prepared by the Regional Fishery Management Councils (Councils) and the Secretary of Commerce (Secretary) under the Magnuson-Stevens Fishery Conservation and Management Act (Magnuson-Stevens Act). The revisions and additions implement the October 1996 amendments to the Magnuson-Stevens Act, which resulted from the Sustainable Fisheries Act (SFA). Additional minor changes are made to conform national standard guideline language to the Magnuson-Stevens Act, as amended. Numerous changes were made to the proposed rule based on comments received.

DATES: Effective June 1, 1998.

FOR FURTHER INFORMATION CONTACT: George H. Darcy, 301–713–2341.

SUPPLEMENTARY INFORMATION: On October 11, 1996, the President signed into law the SFA (Pub. L. 104–297), which made numerous amendments to the Magnuson-Stevens Act (16 U.S.C. 1801 *et seq.*). This rule amends 50 CFR part 600, subpart D, to update the national standard guidelines and to implement the Magnuson-Stevens Act amendments pertaining to the national standards.

Background

Section 301(a) of the Magnuson-Stevens Act contains 10 national standards for fishery conservation and management, with which all FMPs and amendments prepared by the Councils and the Secretary must comply. Section 303(b) requires that the Secretary establish advisory guidelines, herein referred to as ''national standard guidelines,'' based on the national standards, to assist in the development of FMPs. In addition to amending several existing national standards, the SFA established three new national standards, which require consideration of impacts of fishery management decisions on fishing communities (national standard 8), bycatch (national standard 9), and safety of life at sea (national standard 10).

On August 4, 1997, NMFS published a proposed rule at 62 FR 41907 to amend the national standard guidelines; comments were requested through September 18, 1997. The preamble of the proposed rule contained detailed descriptions of the proposed amendments, which are not repeated here. Thirty-seven sets of comments were received during the comment period, which are responded to in the Comments and Responses section of this preamble.

Because of remaining issues regarding interpretation of the Magnuson-Stevens Act's provisions relative to overfishing and rebuilding overfished stocks, NMFS reopened the public comment period on national standard 1 on December 29, 1997 (62 FR 67608), for an additional 30 days. Comments were specifically requested regarding four issues: (1) Usage of the terms ''overfishing'' and ''overfished,'' (2) usage of the terms ''fishery'' versus ''stock,'' (3) rebuilding schedules for overfished stocks, and (4) exceptions for mixed-stock fisheries. The notice of reopening of the comment period on national standard 1 contained a detailed explanation of those issues, which is not repeated here. Thirty-four additional sets of comments were received during the reopened comment period; those comments are also responded to in the Comments and Responses section.

Changes from the Proposed Rule

As a result of public comments received both during the initial comment period and the reopened comment period, NMFS has made the following changes from the proposed rule:

General

NMFS reviewed the entire text of the guidelines to ensure that the terms ''shall,'' ''must,'' and ''should'' are used consistent with the definitions in § 600.305. ''Shall'' is used only when quoting directly from the statute, ''must'' denotes a statutory obligation, and ''should'' indicates that an action is strongly recommended to fulfill the Secretary's interpretation of the Magnuson-Stevens Act.

National Standard 1

1. Section 600.310(c)(3) has been revised to indicate that a reasonable proxy for the MSY stock size is approximately 40 percent of the pristine stock size, rather than the range of 27–75 percent as previously included. This change was made to better reflect the findings of fishery science literature. (See also the response to comment 20 under national standard 1).

2. Section 600.310(d)(4)(iii) has been revised to include a reference to guidelines issued under section 305(b) of the Magnuson-Stevens Act for Council actions concerning essential fish habitat. (See also the response to comment 18 under national standard 1.)

3. Section 600.310(d)(6) has been revised to provide more flexibility in managing mixed-stock fisheries. The proposed guidelines would have allowed overfishing on one component of a mixed-stock fishery only if the rate or level of fishing mortality would not cause any stock or stock complex to fall below its minimum stock size threshold. Paragraph (d)(6)(iii) has been revised to remove that requirement. Paragraph (d)(6)(ii) has been revised to clarify that the intent of the required analysis is thorough consideration of measures that could prevent or mitigate overfishing of one or more stocks in a mixed-stock fishery. (See also the response to comment 35 under national standard 1.)

4. Section 600.310(e)(4)(ii) has been substantively revised to elaborate on the length of rebuilding programs for overfished stocks. The proposed guidelines had simply repeated the statutory language from section 304(e)(4) of the Magnuson-Stevens Act. The notice reopening the comment period offered two options. After considering public comments (see comments 8–16 under national standard 1), NMFS has chosen the more flexible interpretation.

To give meaning to the statutory requirement that a rebuilding program be ''as short as possible,'' the starting point in structuring a rebuilding program is the length of time in which a stock could be rebuilt in the absence of fishing mortality on that stock. If that period is less than 10 years, the factors in section 304(e)(4)(A)(i), including the needs of fishing communities, may be used to adjust the rebuilding period up to 10 years. If the stock cannot be rebuilt within 10 years, because of the factors listed in section 304(e)(4)(A)(ii), the factors in section 304(e)(4)(A)(i) may be used to justify a schedule longer than the no-mortality period. To ensure that

the rebuilding period is not indefinite, the outside limit of the rebuilding period is the no-mortality period plus one mean generation time (or equivalent period based on the species' life-history characteristics).

5. Section 600.310(f)(2)(i) and (ii) have been revised so as not to under emphasize the benefits to the Nation accruing from food production and recreational opportunities. (See also the response to comment 34 under national standard 1).

6. Section 600.310(f)(4)(ii) has been revised so that the annual harvest level obtained under an OY control rule ''must'' instead of ''should'' always be less than or equal to the harvest level under an MSY control rule. This change reflects the SFA's amendment to the definition of ''optimum.''

7. Section 600.310(f)(4)(iii) has been revised to change the term ''research fishing'' to ''scientific research'' to clarify that ''fishing'' under the Magnuson-Stevens Act does not include scientific research activity conducted from a scientific research vessel. (See also the response to comment 45 under national standard 1.)

National Standard 2

1. Section 600.315(e)(1) introductory text has been revised to clarify that SAFE reports are intended to summarize the most recent information concerning the biological condition of stocks and the marine ecosystems in the fishery management unit and the social and economic condition of the recreational and commercial fishing interests, fishing communities, and the fish processing industries. (See also the response to comment 4 under national standard 2.)

2. Section 600.315(e)(1)(ii) has been revised to include safety as one of the types of information that should be summarized in SAFE reports. (See also the responses to comment 2 under national standard 2 and comment 3 under national standard 10).

National Standard 5

Section 600.330(b)(1) has been revised to replace the term ''encouraging,'' with regard to efficient utilization of fishery resources, with the term ''considering,'' to make the wording consistent with the intent of Congress. (See also the response to comment 1 under national standard 5.)

National Standard 8

Section 600.345(c) has been revised, replacing ''should'' with ''must'' in order to reflect the obligation under national standard 8.

National Standard 9

1. Section 600.350(b) has been revised in its entirety to clarify the consideration of bycatch effects of existing and planned conservation and management measures. (See also the response to comment 11 under national standard 9.)

2. Section 600.350(c) has been revised to add language to clarify that Atlantic highly migratory species harvested in a commercial fishery that are not regulatory discards and that are tagged and released alive under a scientific tag-and-release program established by the Secretary are not considered bycatch. Also, language was added to specify that bycatch includes the discard of whole fish at sea or elsewhere. (See also the responses to comments 7 and 8 under national standard 9.)

3. Section 600.350(c)(2) has been removed. (See also the response to comment 7 under national standard 9.)

4. Section 600.350(d) has been revised by replacing ''should'' with ''must'' in order to reflect the obligation under national standard 9. The introductory text has also been revised to emphasize that NMFS believes the first priority for reducing bycatch should be to avoid catching bycatch species where possible. Additional text has been added to § 600.350(d) to indicate that, in their evaluation of bycatch minimization measures, Councils must consider net benefits to the Nation. At the end of § 600.350(d) introductory text, the word ''shall'' has been changed to ''must'' to emphasize that the evaluation requirements of the Magnuson-Stevens Act under this national standard are not discretionary. (See also the responses to comments 24, 25, and 28 under national standard 9.)

5. The first sentence in section 600.350(d)(1) has been revised, replacing ''should'' with ''must'' in order to reflect the required provisions of a fishery management plan under section 303(a)(11) and (12) of the Magnuson-Stevens Act.

6. Section 600.350(d)(2) has been revised to indicate that, in the absence of quantitative estimates of the impacts of each alternative, Councils may use qualitative ''measures'' (rather than ''estimates''). In addition, a sentence has been added to indicate that information on amount and type of bycatch should be summarized in the SAFE report. (See also the response to comment 31 under national standard 9).

7. Section 600.350(d)(3) has been revised to include language that indicates that determinations of whether conservation and management measures minimize bycatch and bycatch mortality to the extent practicable must also be consistent with maximization of net benefits to the Nation. The paragraphs under § 600.350(d)(3) have been redesignated to accommodate the addition of a new paragraph (d)(ii), which states that the Councils should, in selecting bycatch minimization measures, adhere to the precautionary principle found in the FAO Code of Conduct for Responsible Fisheries. (See also the responses to comments 33 and 35 under national standard 9.)

8. Section 600.350(d)(4) has been revised to delete the terms ''implement'' and ''implementation'' when referring to the Councils' required actions under national standard 9, because it is NMFS' responsibility, rather than that of the Councils, to implement management measures. This change was not a result of public comment.

National Standard 10

Section 600.355(b)(3) has been revised to include language that clarifies that safety of the fishing vessel and the protection from injury of persons aboard the vessel are considered the same as ''safety of human life at sea.'' (See also the response to comment 5 under national standard 10.)

Comments and Responses

General

Numerous commenters concluded that, in general, the proposed guidelines reflect fairly the intent of the SFA's amendments to the Magnuson-Stevens Act. Comments concerning specific aspects of the proposed revisions to guidelines for individual national standards are presented and responded to in the following paragraphs.

NMFS received several comments on language contained in the preamble of the proposed rule. Because the preamble was intended only to explain and clarify material contained in the codified text, NMFS has not responded to comments that pertained only to the preamble. However, in instances where such comments pertained also to language in the codified text, or where such comments led to changes in the codified text from the proposed rule, NMFS has responded in the following paragraphs.

Comment 1: Several commenters expressed their view that sufficient flexibility should be provided in the guidelines to provide managers with appropriate latitude to meet the objectives of the SFA while respecting the needs of communities and citizens.

Response. NMFS agrees that some flexibility in application of the national standards was intended by Congress, is necessary to manage the diverse

fisheries of the Nation, and should be provided to respond to the needs of fishery participants and communities, so long as the stocks upon which the fisheries are based can be rebuilt and their productivity sustained. However, any such flexibility must be consistent with all of the statutory requirements of the Magnuson-Stevens Act. In addition, NMFS believes that the guidelines must reflect the intent of the Magnuson-Stevens Act taken as a whole. After carefully considering the public comments received, the language in the SFA, and the legislative history, NMFS concluded that there is justification to introduce greater flexibility in certain aspects of the guidelines, most notably the rebuilding schedules for overfished stocks and for mixed-stock fisheries; those changes have been made in this final rule. (See also Changes from the Proposed Rule and responses to comments 9 and 35 under national standard 1.)

Comment 2. One letter of comment stated that the final rule should clarify that the national standard guidelines are advisory and do not have the force and effect of law.

Response. NMFS agrees that the guidelines do not have the force and effect of law and believes it made that point clearly in the preamble to the proposed rule. For example, the proposed rule contains the following statements:

(1) ''These proposed guidelines are intended to provide direction and elaboration on compliance with the national standards and, in themselves, do not have the force and effect of law.''

(2) ''The guidelines are intended to assist in the development and review of Fishery Management Plans (FMPs), amendments, and regulations ...''

(3) ''The proposed guidelines explain requirements and provide some options for compliance with the guidelines. Lists and examples are not all inclusive; rather, they are intended to provide illustrations of the kind of information, discussion, or examination/analysis useful in demonstrating consistency with the standard in question. The proposed guidelines are intended to provide for reasonable accommodation of regional or individual fishery characteristics, provided that the requirements of the Magnuson-Stevens Act are met. The guidelines are intended as an aid to decision making, with responsible conservation and management of valued national resources as the goal.''

(4) ''The main purpose of the guidelines is to aid the Councils in fulfilling the requirements of the Magnuson-Stevens Act.''

Throughout the proposed rule, the guidelines are referred to as advisory, explanatory, and interpretive. In addition, NMFS has attempted to make clear the distinction between ''must'' and ''should'' as used in the guidelines.

Comment 4. One commenter stated that it will be very difficult for the Councils to meet the SFA's compliance deadlines for all fisheries, given the requirements set forth in the guidelines.

Response. NMFS agrees that the statutory deadlines established by the SFA and reflected in the guidelines will be challenging to meet. However, NMFS is committed to working closely with the Councils to meet those deadlines.

Comment 5. One commenter suggested that aquaculture activities should be considered in the guidelines because, even with the best regulatory controls and the restoration of wild stocks to levels that produce maximum sustainable yield (MSY), the demand for seafood products cannot be met from these sources alone.

Response. Aquaculture is considered a fishery, as defined by the Magnuson-Stevens Act, so the national standard guidelines apply and should be followed by Councils as they consider integrating aquaculture activities into FMPs.

Comment 6. One commenter questioned NMFS' ability to comply with several provisions of the SFA because of budgetary constraints.

Response. Compliance with all of the provisions of the amended Magnuson-Stevens Act has been difficult, at best. However, NMFS has had significant success in implementation, within the available resources, using all of the available tools at its disposal. For example, the great majority of the deadlines established in the SFA that are within the control of NMFS have been met. In the few instances where deadlines have been missed, it has been primarily the result of providing additional time for public involvement and comment. NMFS' successes in meeting deadlines have been due in part to reprogramming of priorities and resources within NMFS to the maximum extent allowed by law, and to Congressional reprogramming of funds made available within NOAA.

Comment 7. One commenter stated that NMFS must consider all affected users, including seafood consumers, in managing fisheries. The goal should be healthy, sustainable use for everyone's benefit.

Response. NMFS agrees that all users must be considered in achieving the Magnuson-Stevens Act's goal of maximizing net benefits to the Nation.

Comment 8. Two commenters stated that NMFS is inviting trouble by stating in the preamble that it will take considerable time and effort to bring all FMPs into compliance. Waiting until the October 11, 1998, deadline to amend all FMPs will cause a logjam of amendments, and conservation reforms will not be implemented in a timely manner.

Response. NMFS has worked with the Councils from the earliest stages of implementation of the SFA to plan and prepare for necessary amendments of FMPs. In addition, NMFS has conveyed to the Councils that, on October 11, 1996, the day the President signed the SFA into law, many of the provisions of the SFA, such as national standards 8, 9, and 10, became effective. All regulatory actions finalized after that date were required to comply with those standards, as well as with many other provisions of the SFA. In some cases, the details of implementation have had to be developed, such as the national standard guidelines that are the subject of this rule. Until those details are finalized, the Councils will not be able to take them fully into account in development of their management actions. As the specifics of those provisions are finalized, all of the Councils' proposed actions will be judged on the basis of those requirements, as well.

Comment 9. Several commenters suggested that anecdotal information and public testimony should be allowed and treated as fact. A particular concern was that, in establishing objective and measurable criteria for determining the status of a stock, anecdotal information from fishermen, especially commercial information, is precluded from use in stock assessments.

Response. The Magnuson-Stevens Act requires the use of the best scientific information available and the use of quantifiable parameters to manage fisheries. The inclusion of objective and measurable criteria in the guidelines applies the Magnuson-Stevens Act's approach to using reproducible, scientifically based information in stock assessments. This approach is necessary to preclude having to choose among unsubstantiated opinions about a stock's condition. The public is free, however, to submit anecdotal information to the Councils and to the Secretary, including through public testimony and comment during the development of plans and implementing regulations; all such information will be made part of the administrative record. While anecdotal information cannot be afforded the same status as scientific information obtained under a well-designed data collection

plan, it can be particularly useful in identifying potential problems with scientifically obtained information and can be part of the basis for a redesign of the data collection program.

Comment 10. Several commenters requested that, given the complex nature of the proposed guidelines, additional time be allowed for public comment. Others expressed serious concern that the lack of guidance on critical issues such as overfishing could compromise the ability of the Councils to comply with the new conservation requirements of the Magnuson-Stevens Act. Some commenters felt that delays in issuing final guidelines have undermined public confidence in NMFS' commitment and ability to effectively implement the conservation mandates of the Magnuson-Stevens Act and urged NMFS to complete the comment periods and proceed with advice and guidelines to the Councils as swiftly as possible.

Response. Despite its commitment to publish final guidelines as soon as possible, after reviewing the diverse comments received during the first comment period, NMFS determined that it was in the best interest of the public to provide an additional opportunity for comment on the most problematic issues regarding national standard 1. However, the completion of the Report to Congress and notification of Councils of the list of overfished fisheries on September 30, 1997, placed an imperative on NMFS to complete the guidelines as quickly as possible. If Councils fail to submit rebuilding plans for all overfished stocks by September 30, 1998, the Secretary must develop rebuilding plans for the Councils for each overfished stock by June 30, 1999.

Comment 11. One commenter disagreed with NMFS' determination that the proposed rule would not have a significant economic impact on a substantial number of small entities for purposes of the Regulatory Flexibility Act.

Response. NMFS believes that its determination of no significant economic impacts on a substantial number of small entities in the proposed rule accurately reflects the effects of this action on small entities. Because this rule only amends guidelines, and does not have the force and effect of law, it does not, in itself, revise any existing regulatory programs or establish any new regulatory requirements. NMFS has no basis, at this time, to assess specific effects of possible future management actions that may result from this rule, except in the broadest sense. Only when future amendments to fishery management programs are implemented will potential impacts on small entities occur. At the time regulations are developed, the impacts on small entities of potential alternatives will be assessed; Regulatory Flexibility Analyses and other analytical documents will be prepared, as required by applicable law, and made available for public comment.

National Standard 1

Comment 1. Several commenters objected to the fundamental role played by MSY throughout the guidelines for national standard 1. A variety of reasons were cited, including the lack of flexibility afforded by use of MSY, the difficulty of estimating MSY, and the fact that some fishery scientists disfavor the concept.

Response. No change was made. MSY is key to the Magnuson-Stevens Act, even more so than under the former Magnuson Act. MSY now constitutes an upper limit on optimum yield (OY), as stated in section 3(28)(B) of the Magnuson-Stevens Act; is established as the initial target for rebuilding an overfished stock or stock complex in section 3(28)(C); and is the cornerstone of the definition of overfishing in section 3(29). In reviewing the language in the Magnuson-Stevens Act as a whole, and the legislative history of the SFA, NMFS believes the lack of flexibility imposed by ascribing such a fundamental role to MSY was clearly an intent of Congress. The difficulty of estimating MSY is a significant problem that will require the best efforts of NMFS and the Councils to solve. While it is true that some fishery scientists disfavor the concept of MSY, others find it very useful, and its application in international agreements is on the increase, particularly in the establishment of precautionary approaches to fishery management.

Comment 2: Several commenters offered the following view relative to the usage of ''overfishing'' and ''overfished'': The terms ''overfishing'' and ''overfished'' used in the SFA are intended to have the same meaning given to the term ''overfishing'' in the existing guidelines and are not intended to change the emphasis on or timeframe for addressing overfishing. The deletion of the modifier ''long-term'' from the regulatory definition of ''overfishing'' was not significant; the use of MSY is a target, not a constraint within which OY is determined. However, use of the term ''fishery'' instead of ''stock or stock complex'' in the SFA definition of overfishing and overfished was an intentional change from the wording in the existing guidelines to ensure that multi-species or mixed-stock fisheries are managed and considered as a unit.

Other commenters agreed with NMFS' interpretation that removal of the phrase ''long-term'' in the statutory language is significant in that it raises the standard to which conservation and management measures are held.

Response: NMFS disagrees that the definition for ''overfishing'' and ''overfished'' in the SFA did not change the emphasis on or timeframe for addressing overfishing or that MSY is only a target instead of a constraint. However, NMFS does agree that use of the term ''fishery'' instead of ''stock or stock complex'' was an intentional change intended to allow for the management of mixed-stock fisheries on a unit basis (see also response to comments 35 and 36). The definition for ''overfishing'' and ''overfished'' (identically defined) has as its basis the current definition of ''overfishing'' in the existing national standard guidelines (50 CFR 600.310(c)(1)). That definition states: ''Overfishing is a level or rate of fishing mortality that jeopardizes the long-term capacity of a stock or stock complex to produce MSY on a continuing basis.''

During the development of the Magnuson-Stevens Act's amendments, NOAA suggested to Congressional staff that the phrase ''long-term'' be deleted from the definition of ''overfishing'' to require Councils to stop overfishing sooner rather than later. Congress chose to delete the modifier ''long-term'' when referring to the capacity of a stock to produce MSY. NOAA considered this change to be significant. Other amendments to the SFA bolster this interpretation:

(1) The rebuilding requirements (especially the 10-year maximum with three very limited exceptions, and the Secretary's obligation to develop rebuilding plans if the Councils fail to do so).

(2) Congress' conclusion that the survival of certain stocks is threatened and that immediate action needs to be taken to protect those stocks (section 2(a)(2) of the SFA).

In addition, floor debates in both the House and Senate expressed Congressional displeasure with the length of time Councils have taken in the past to address overfishing problems (see, for example, the statement of Senator Stevens at S10810, September 18, 1996).

The SFA points to MSY as the goal of rebuilding programs and to maintenance of stocks at this level on a continuing basis. Unless MSY is established as a strict goal, the greatly enhanced benefits anticipated by enactors of the SFA

cannot be achieved. This position is supported by the following:

(1) The intent of the SFA was to require Councils to ensure that fish stocks were not harvested beyond their MSY, as evidenced by the debate on the floor of the House, when members voted 304–113 to adopt the Gilchrest amendment specifically stating that OY could no longer exceed MSY. The new definition of ''optimum'' was maintained in the Senate bill that ultimately became law.

(2) Section 3(28)(C) indicates that, for overfished fisheries, rebuilding is to occur until the stocks have reached a level that can produce MSY on a continuing basis.

(3) Inclusion of a rebuilding requirement in the Magnuson-Stevens Act implies that stock size is relevant to the concept of ''overfishing'' and ''overfished,'' and that MSY (a measure of biomass) is to be used as the measure against which the success of a rebuilding program is judged. A rebuilding requirement without a biomass foundation has no meaning.

(4) The phrase ''on a continuing basis'' in the SFA definition of ''overfishing'' indicates that stocks are to be maintained at levels capable of producing MSY (and OY) on a continuous (uninterrupted) basis; thus, short-term overfishing that causes populations to decline below these levels is not permissible. HR 39 would have allowed OY to exceed MSY for healthy fisheries, but that approach was rejected in the Senate bill, which became law.

(5) Senator Hollings in the floor debate on the Sustainable Fisheries Act (Congressional Record - Senate, September 18, 1996) stated that ''The bill also: First, caps fishery harvests at the maximum sustainable levels and requires action to prevent overfishing and rebuild depleted fisheries; * * *''

(6) The summary of the Managers Amendment to S. 39 (The Sustainable Fisheries Act), as printed in the Congressional Record - Senate on September 19, 1996, states in the discussion regarding definitions that ''this change prevents the maximum sustainable yield of a fishery from being exceeded.''

(7) Senate Report No. 104–276 regarding the Sustainable Fisheries Act states on page 4077 that ''Finally, the substitute would amend the existing definition of 'optimum' with respect to fishery yield to cap fish harvests at the maximum sustainable yield.''

Comment 3. Several commenters objected to the proposed definition of MSY control rule in § 600.310(c)(1)(ii) or to the identification of the maximum fishing mortality threshold with the MSY control rule in § 600.310(d)(2)(i). Typically, the objections centered around the degree of flexibility afforded to the Councils in choosing the form of the MSY control rule (and thereby, the maximum fishing mortality threshold). Commenters generally felt that the language of the Magnuson-Stevens Act permits only one choice of MSY control rule—namely, harvesting at a single, invariant rate, where this rate is chosen so as to maximize the resulting long-term average yield. Given this interpretation, the commenters stated that the Councils should be denied the option of varying the maximum fishing mortality threshold as a function of stock size.

Response. No change was made. While the Magnuson-Stevens Act clearly requires that fishing mortality be prevented from exceeding rates or levels that would jeopardize the capacity of a stock or stock complex to produce MSY on a continuing basis, it does not indicate that such rates or levels cannot vary with stock size. In general, MSY control rules that allow for the fishing mortality rate to vary with stock size (i.e., those that decrease fishing mortality when stock size is low) provide a higher average catch and a lower probability of observing a seriously reduced stock size than those that require the fishing mortality rate to remain constant. NMFS believes both of these characteristics are very much in keeping with the letter and intent of the Magnuson-Stevens Act.

Comment 4. Several commenters objected to the proposed inclusion of a ''constant catch'' example in § 600.350(c)(2)(i), feeling that this particular MSY control rule is inefficient or potentially dangerous.

Response. No change was made. The example is included partly for logical completeness. The commenters are correct that this control rule is a safe harvest strategy only when the catch level is chosen very conservatively, in which case some amount of potential yield is foregone. However, in cases where minimizing harvest variability is a primary concern, it is conceivable that the greatest net benefits might be realized by making such a tradeoff (i.e., by giving up a certain amount of catch, on average, in order to increase year-to-year stability of harvests).

Comment 5. Several commenters objected to the proposed definition of MSY in § 600.310(c)(1)(i). Concerns included the fact that the largest long-term average catch may vary with changes in the minimum size limit or selectivity pattern, the perception that the definition is invalid for stocks that are already overfished, and the difficulty of establishing a long-term average under current environmental conditions when those conditions do not prevail over the long term.

Response. No change was made. As defined in § 600.310(c)(1)(i), MSY does not vary with changes in the minimum size limit or selectivity pattern. While such changes can have an effect on long-term average catches, the guidelines view MSY in a more global sense. In other words, MSY is the largest long-term average catch across all possible management regimes, not just a single management regime characterized by a particular minimum size limit or selectivity pattern. In terms of its applicability to overfished stocks, the guidelines' definition of MSY is valid, providing that ''long-term'' is suitably defined. As to the relationship between MSY and environmental conditions, it should be noted that MSY is the largest long-term average catch that could be obtained if current ecological and environmental conditions were to remain constant indefinitely. Of course, ecological and environmental conditions do not remain constant indefinitely, which is one of the reasons for the guidelines' emphasis on the fact that MSY is a theoretical concept, rather than an empirical one.

Comment 6. Several commenters were concerned that insufficient consideration was given to allowing for uncertainty in the estimation of MSY, for example due to errors in catch and other input data, estimation errors in stock assessments, frequency of stock assessments, and changes in environmental conditions.

Response. No change was made. As emphasized in § 600.310(c)(2)(ii), allowing for uncertainty in the estimation of MSY is important. The items listed in the above comment are excellent examples of factors that Councils are encouraged to consider in the process of incorporating appropriate consideration of risk into the estimation of MSY.

Comment 7. Several commenters objected to the examples of alternatives to specifying MSY in § 600.310(c)(3). A variety of reasons were cited, including the fact that some of the examples listed might not be appropriate in all cases, the fact that some possible alternatives were not listed, and the fact that the alternatives listed depend on estimated values rather than known quantities.

Response. No change was made. As noted in § 600.305(c)(9), examples (such as those listed in § 600.310(c)(3)) are given by way of illustration and further explanation. They are not inclusive lists; they do not limit options. Thus,

the reference points listed in § 600.310(c)(3) are intended to suggest some ways in which Councils might proceed in the event that data are insufficient to estimate MSY directly. The fact that a reference point is not included in § 600.310(c)(3) does not necessarily mean that it may never be used as a proxy for MSY. Nor does the fact that a reference point is included in § 600.310(c)(3) necessarily mean that it may always be used as a proxy for MSY. However, there is no escaping the conclusion that, regardless of whether MSY or a proxy is used, some sort of estimation will necessarily be involved.

Comment 8. Several commenters objected to proposed paragraphs that contain references to a 10-year time period for rebuilding, but that do not contain the full text of the statutory language clarifying that 10 years is a constraint rather than a target. In particular, some commenters objected to the mention of a 10-year time period for rebuilding in § 600.310(d)(2)(ii), feeling that this contradicted the fuller discussion of the statutory language in § 600.310(e)(4)(ii). More specifically, a stock that is below the MSY level, but not overfished under § 600.310(d)(2)(ii), might take as long as 10 years to rebuild to the MSY level if fished at the maximum rate allowable under § 600.310(d)(2)(i), even though the Magnuson-Stevens Act states clearly that the rebuilding period for an overfished stock or stock complex must be as short as possible, taking into account the status and biology of the stock or stock complex, the needs of fishing communities, recommendations by international organizations in which the United States participates, and the interaction of the overfished stock or stock complex within the marine ecosystem.

Response. No change was made. The statutory timeframe for rebuilding is clearly a binding constraint on Council actions undertaken to rebuild a stock or stock complex that is overfished. No provision of the guidelines can, or is intended to, override the statutory language. The subject of § 600.310(d)(2)(ii), the minimum stock size threshold, is distinctly different from the subject of § 600.310(e)(4)(ii), the acceptable timeframe for rebuilding an overfished stock or stock complex. The former describes how to tell whether a stock or stock complex is overfished, while the latter describes what to do if a stock or stock complex is overfished.

Comment 9. Several commenters asked that the guidelines contain an explicit interpretation of the statutory description of the time period for rebuilding summarized in § 600.310(e)(4)(ii) of the proposed rule.

Response. NMFS agrees; this request was a primary reason the comment period was reopened. As described under Changes from the Proposed Rule, § 600.310(e)(4)(ii) has been substantially revised to interpret the statutory provision.

Comment 10. One commenter stated that the biology of the stock does not dictate a rebuilding period of more than 10 years unless recovery is impossible in the absence of all fishing mortality.

Response. The starting point in structuring a rebuilding program is the length of time it would take a stock to recover if fishing mortality ceased. That a stock is long-lived, or reproduces slowly, does not necessarily mean that it could not be rebuilt within 10 years. The initial relevant inquiry is the no-fishing mortality period. If it is less than 10 years, factors such as the needs of fishing communities may justify lengthening the schedule to 10 years. If the no-mortality period is longer than 10 years, the schedule can also be adjusted, relying on those factors, up to a limit based on the stock's life-history characteristics.

Comment 11. A number of commenters preferred the first option offered in the notice reopening the comment period. They believed the rebuilding period should not be indeterminate. For stocks that cannot be rebuilt within 10 years, even in the absence of fishing mortality, the commenters thought the factors in section 304(e)(4)(A)(i) of the Magnuson-Stevens Act should not be used to extend the rebuilding period.

Response. NMFS agrees that the rebuilding period should not be indeterminate. For stocks that will take more than 10 years to rebuild, the guidelines impose an outside limit that is objective, measurable, and linked to the biology of the particular species. While the statutory language is subject to more than one interpretation, NMFS believes the factors in section 304(e)(4)(A)(i) may be used to extend the rebuilding period, whether the no-fishing mortality period is shorter or longer than 10 years.

Comment 12. Two commenters argued that ''as short as possible'' means the time period should not be allowed to stretch to 10 years for stocks that could be rebuilt more quickly.

Response. The guidelines allow a rebuilding program to extend to 10 years, but only when the Council can justify that the needs of fishing communities or other factors in section 304(e)(4)(A)(i) of the Magnuson-Stevens Act outweigh the imperative to rebuild the stock as quickly as possible.

Comment 13. Other commenters stated the outer limit should be ''reasonable,'' perhaps based on life-history characteristics. Proposals included 10 years plus one reproduction cycle; one generation time; and the no-fishing mortality period plus a period linked to fishing mortality levels that will not prevent steady rebuilding. Some commenters believed that Congress did not intend for many fisheries to be closed if they could not be rebuilt within 10 years; rather, a reduced level of fishing should be allowed.

Response. The guidelines strike a balance between the Congressional directive to rebuild stocks as quickly as possible, and the desire, expressed in national standard 8, to minimize adverse economic effects on fishing communities. For stocks that cannot be rebuilt within 10 years, the guideline allows flexibility in setting the rebuilding schedule beyond the no-fishing mortality period, but places a reasonable, species-specific cap on that flexibility by limiting the extension to one mean generation time. Reduced fishing mortality that result in steady increases in the biomass are acceptable, if rebuilding goals can be met within the timeframe specified in the guideline.

Comment 14. A few commenters thought there should be no upper limit on the rebuilding period, and that the length of a rebuilding schedule should be left to Council discretion.

Response. Congress chose 10 years as the upper limit for the rebuilding period for most stocks; the exceptions in section 304(e)(4)(A)(ii) of the Magnuson-Stevens Act are narrow. For stocks that fall within the exceptions, the mandate that they be rebuilt in ''as short as possible'' a period indicates the need for a definite, measurable bound on the rebuilding schedule. The Congressional intent is very clear, that the previous practice of unlimited discretion in rebuilding stocks must be changed.

Comment 15. Several commenters suggested that stocks whose rebuilding would not be affected by the cessation of fishing mortality should be exempt from the provisions of section 304(e)(4) of the Magnuson-Stevens Act.

Response. NMFS understands that factors other than fishing mortality confound and handicap rebuilding efforts for some stocks, but can find no basis in the statute for exempting such stocks from the rebuilding requirement. (See also the response to comment 18 under national standard 1). The flexibility introduced in the rebuilding and mixed-stock provisions of the

guidelines should assist in management of these stocks.

Comment 16. Two commenters suggested that the guidelines contain an explicit description of the starting point for the rebuilding period.

Response. Section 600.310(e)(4)(ii) has been revised to indicate that the rebuilding period commences as soon as the first measures in a new or revised rebuilding program are implemented.

Comment 17. Two letters of comment raised concern that rebuilding programs may not be adopted until the year 2000 due to delays in approving new overfishing definitions and the submission of rebuilding programs based on those definitions. The commenters believe that new overfishing definitions and rebuilding programs in accordance with those programs should be submitted by October 11, 1998.

Response. NMFS agrees that rebuilding programs may be delayed beyond the year 2000, given the schedules established by the SFA, but will work with the Councils to implement revised definitions of overfishing and rebuilding plans as soon as possible. NMFS has clearly communicated to the Councils that section 108(b) of the SFA requires them to amend their FMPs not later than 24 months after enactment of the SFA (October 11, 1996) to bring them into conformance with the provisions of sections 303(a)(1), (5), (7) and (9)-(14) of the Magnuson-Stevens Act. Section 303(a)(10) specifically requires the specification of objective and measurable criteria for identifying when the fishery to which the FMP applies is overfished, and section 304(e) requires the submission of rebuilding plans for stocks that are determined to be overfished.

On September 30, 1997, NMFS submitted a report to Congress that identified those stocks in their areas of jurisdiction that are overfished or approaching an overfished condition, based on existing overfishing definitions, as required by the Magnuson-Stevens Act. The Councils were notified that they have 1 year within which to submit rebuilding programs for those stocks identified as overfished. Therefore, the Councils are to be simultaneously working on both new definitions of overfishing and rebuilding plans, as necessary. As new overfishing definitions are approved, the status of stocks will need to be reassessed against those new criteria. It is likely that some stocks that were not listed as overfished when judged against the overfishing definitions in place in September 1997 will be determined to be overfished when compared to the criteria in new definitions. If and when that occurs, NMFS will notify the affected Council(s) and the public of that fact and the Council(s) will have 1 year from that date in which to submit a rebuilding plan.

Comment 18. Two commenters suggested that the guidelines elaborate on the relationship between environment/habitat and the specified time period for rebuilding. In particular, the commenters wondered what is meant by the term ''environmental conditions,'' whether remedial action would still be required in the event that environmental conditions cause the minimum possible rebuilding time to exceed 10 years, whether MSY should be re-estimated if habitat capacity changes, and, if so, whether remedial action could appropriately address habitat issues as well as fishing mortality.

Response. Except for a slight revision to § 600.310(d)(4)(iii), as described below, no change was made. ''Environmental conditions'' means those biological or physical components of the marine ecosystem with which the overfished stock or stock complex interacts (also see revised § 600.310(e)(4)(ii)). Council action is required whenever a stock or stock complex is determined to be overfished, regardless of whether it is possible to achieve rebuilding within 10 years. Regarding MSY, it is clear from the definition in § 600.310(c)(1)(i) that MSY is conditional on the state of the environment, which includes habitat. As noted in § 600.310(d)(4)(ii), environmental changes that affect the long-term productive capacity of the stock or stock complex require re-specification of one or more status determination criteria. As noted in § 600.310 (d)(4)(iii), Councils should recommend restoration of habitat in cases where manmade environmental changes are partially responsible for a stock or stock complex being in an overfished condition. In addition, § 600.310(d)(4)(iii) has been revised to reference the Councils' responsibilities in cases where essential fish habitat is concerned.

Comment 19. Several commenters objected to the proposed requirement that each FMP specify, to the extent possible, both a maximum fishing mortality threshold and a minimum stock size threshold for each stock or stock complex covered by that FMP (§ 600.310(d)(2)).

Response. No change was made. Section 303(a)(10) of the Magnuson-Stevens Act requires the specification of status determination criteria, and sections 304(e)(1) and 304(e)(2) state that these criteria are to be used for the purpose of determining which fisheries are in need of action ''to end overfishing'' and ''to rebuild affected stocks of fish.'' The only way that both needs (''end overfishing'' and ''rebuild affected stocks'') can be addressed is if the status determination criteria include measures appropriate to each—namely, one measure pertaining to the rate of fishing mortality and another measure pertaining to the size of the stock. That is, if only a maximum fishing mortality threshold were specified, it would be possible to determine which fisheries require action to end overfishing, but it would not be possible to determine which fisheries require action to rebuild affected stocks. Conversely, if only a minimum stock size threshold were specified, it would be possible to determine which fisheries require action to rebuild affected stocks, but it would not be possible to determine which fisheries require action to end overfishing.

Comment 20. Several commenters objected to the proposed provision in § 600.310(d)(2)(ii) that would allow the minimum stock size to be as low as 50 percent of the MSY stock size, conditional on an appropriate choice of MSY control rule. These commenters felt uniformly that Congress intended for any stock or stock complex below its MSY level to be considered overfished, and suggested that a stock size threshold be set at 80 percent (one commenter said ''at or above 80 percent'') of the MSY stock size. The commenters were divided over whether this reference point should constitute a minimum threshold or an ''interim'' threshold, where an interim threshold was defined as a point that ''should trigger a review of what remedial action is necessary to prevent the decline from continuing.''

Response. No change was made. A key question is whether Congress intended for each stock or stock complex that temporarily falls below its MSY level to be considered overfished, even if the rate of fishing mortality on that stock or stock complex has consistently been within the limit allowed by the MSY control rule. If the answer is ''yes,'' then any threshold below the MSY stock size is unacceptable: For example, a threshold set at 80 percent of the MSY stock size is just as unacceptable as one set at 50 percent of the MSY stock size. However, NMFS believes it is important to remember that natural variability is an inherent part of fishery systems, and that any stock or stock complex managed for MSY will sooner or later

fall below its MSY level, though only temporarily.

Because the Magnuson-Stevens Act explicitly allows OY to be as high as MSY, NMFS believes that Congress must have intended to allow stocks to be managed such that stocks were capable of producing MSY, meaning that Congress must have been willing to accept the consequence that some stocks would fall below their respective MSY producing levels temporarily. Given this interpretation, the question becomes, ''How low is too low?'' While the fishery science literature does not provide a definitive answer to this question, NMFS believes that a prudent rule can be established as follows: Two of the best known models in the fishery science literature find that, on average, the stock size at MSY is approximately 40 percent of the stock size that would be obtained if fishing mortality were zero (the pristine level). (The actual values are 36.8 percent (Gompertz-Fox model) and 50 percent (Verhulst-Schaefer model). Also, the fishery science literature contains several suggestions to the effect that any stock size below about 20 percent of the pristine level should be cause for serious concern. In other words, a stock's capacity to produce MSY on a continuing basis may be jeopardized if it falls below a threshold of about one-fifth the pristine level. Expressing this threshold in terms of the stock size at MSY results in a minimum stock size threshold equal to 50 percent of the MSY level. A stock at 50 percent of its MSY level would typically be close to 20 percent of its pristine level, a threshold below which it must not be allowed to fall.

Of course, the guidelines do not prohibit the Councils from setting as many ''interim'' stock size thresholds as they like, so long as these are above the minimum stock size threshold. However, it would be a mistake for the guidelines to require use of an interim stock size threshold set at 80 percent of the MSY level in all cases, insofar as some stocks may be incapable of rebuilding to the MSY level from such a threshold within the statutory time period, depending on the status and biology of the stock, the stock's interactions with other components of the marine ecosystem, and the choice of MSY control rule.

Comment 21. Several commenters suggested that the guidelines contain an explicit prohibition against ''short-term'' or ''pulse'' overfishing.

Response. No change was made. Taken together, § 600.310(d)(2)(i), (e)(3), and (e)(3)(i) already indicate that exceeding the maximum fishing mortality threshold for even a single year is not permissible, except as provided under § 600.310(d)(6). If ''short-term'' or ''pulse'' overfishing means that the maximum fishing mortality threshold would be exceeded for a period of at least 1 year, then the guidelines clearly prohibit these practices.

Comment 22. Two commenters suggested that the minimum stock size threshold should always be set equal to the MSY stock size. However, one of these commenters further suggested that it should be permissible for a stock or stock complex to fall slightly below its minimum stock size threshold on an occasional basis without being considered overfished.

Response. No change was made. Setting the minimum stock size threshold equal to the rebuilding target means that natural variability will frequently cause stocks to be classified as ''overfished,'' even if no overfishing ever occurs. The suggestion to permit occasional, slight violations of the minimum stock size threshold would require establishing criteria for determining the acceptable rate and extent of threshold violation, which would undoubtedly be a problematic exercise.

Comment 23. Several commenters suggested that the guidelines should incorporate, to the maximum extent possible, recent strides made in the application of the precautionary approach, such as those contained in the United Nations Treaty on Straddling Stocks and Highly Migratory Species.

Response. No change was made. The guidelines are already very much in step with, and in some cases ahead of, recent strides made in the application of the precautionary approach in the international arena. In addition, as noted in the preamble of the proposed rule, further technical guidance regarding specification of a precautionary approach will be provided by NMFS in the near future.

Comment 24. One commenter suggested that the guidelines should require all MSY estimates (both point estimates and ranges) and OY specifications (both single values and ranges) to be accompanied by confidence intervals, which the commenter felt to be a basic component of a risk-averse approach. The commenter suggested that such confidence intervals could be qualitative in nature, if necessary.

Response. No change was made. NMFS agrees that a risk-averse approach is highly desirable, both for estimation of MSY and for specification of OY, but does not believe that requiring confidence intervals for these quantities is necessarily the best or only way to implement such an approach. For example, if point estimates are determined in an explicitly risk-averse manner, the addition of confidence intervals could prove more confusing than helpful, especially to a nontechnical audience. However, in those cases where Councils feel that confidence intervals would be helpful, § 600.310(c)(2)(ii) already gives the Councils explicit latitude to use them. The same paragraph also requires that appropriate consideration of risk be incorporated into estimates of MSY, while § 600.310(f)(5)(iii) states that criteria used to set target catch levels (such as OY) should be explicitly risk averse, so that greater uncertainty regarding the status or productive capacity of a stock or stock complex corresponds to greater caution in setting target catch levels.

Comment 25. One commenter suggested that a precautionary approach is not appropriate for a management target such as OY.

Response. No change was made. Contrary to this comment, NMFS believes a precautionary approach is particularly appropriate for a management target such as OY. If management is effective, harvests will typically be close to the target level, so if the precautionary approach is to have a substantial impact on fishery management, it needs to be applied to management targets at least as much as to management thresholds.

Comment 26. One commenter suggested that the description of the precautionary approach should state that lack of information should not prevent a Council from taking reasonable steps to address fishery resource problems.

Response. No change was made. This suggestion is already implicit in § 600.310(f)(5)(iii), which states that greater uncertainty (i.e., greater lack of information) should correspond to greater caution in setting target catch levels. NMFS believes that prudent decision-making in the face of uncertainty is a cornerstone of any precautionary approach.

Comment 27. Two commenters expressed concern over the target stock size for rebuilding. One commenter suggested that the target should be the OY stock size and felt that the guidelines erred in treating the MSY stock size as though it were the target. The other commenter suggested that the target ought to be the MSY stock size and felt that the guidelines erred in treating the MSY stock size as though it were a threshold.

Response. The Magnuson-Stevens Act, in section 3(28)(C), implies strongly that the MSY stock size is at least an initial target for rebuilding. Of course, to the extent that OY is lower than MSY and that management is generally successful in achieving OY on a continuing basis, the OY stock size will be greater than the MSY stock size; thus the ultimate target level (OY stock size) will be greater than the initial target level (MSY stock size). The guidelines are consistent in treating the MSY stock size as a constraint rather than as a threshold.

Comment 28. Several commenters suggested that the method for calculating rebuilding time requires clarification. Assuming that some sort of estimation is involved in calculating rebuilding time, a number of possibilities present themselves. Does ''rebuilding time'' refer to the expected rebuilding time, the median rebuilding time, some percentile of rebuilding times, or something else?

Response. No change was made. The commenters are correct that there are a large number of ways to calculate rebuilding time. In addition to statistics pertaining to the time required to reach some specified stock size, other possibilities include various statistics pertaining to the stock size achieved at some specified future time—for example, the expected stock size, the median stock size, or some percentile of stock sizes. While these choices pose potentially substantive issues, NMFS believes there are a number of reasonable ways to calculate rebuilding time that would be consistent with the provisions of the national standard 1 guidelines. It is beyond the scope of these guidelines to establish a single method to be used in all cases. However, it is possible that the forthcoming technical guidance regarding the precautionary approach (as described in the preamble to the proposed rule) could address these issues.

Comment 29. One commenter suggested that the maximum fishing mortality threshold should be greater than the fishing mortality rate associated with the chosen MSY control rule. The commenter noted that this would be consistent with the approach taken by Rosenberg *et al.* (1994)(see preamble to the proposed rule).

Response. No change was made. The commenter is correct insofar as the report by Rosenberg *et al.* (1994) interpreted the former Magnuson Act as taking overfishing to be a rate of fishing mortality somewhat greater than the rate associated with any MSY control rule. However, it is clear that the Magnuson-Stevens Act takes a different, more conservative, approach by linking overfishing much more directly to MSY. Allowing the maximum fishing mortality threshold to exceed the fishing mortality rate associated with the MSY control rule would thus be inconsistent with the Magnuson-Stevens Act.

Comment 30. One commenter felt that the proposed procedural requirements for interim measures in § 600.310(e)(5) are too burdensome. The commenter stated that, under the proposed guidelines, the Councils would essentially have to develop the same measures as part on an FMP or amendment for implementation on a more permanent basis, before recommending the measures as interim measures. Instead, the Councils should be allowed to recommend an interim action whenever there is a substantial conservation benefit to be gained.

Response. No change was made. NMFS agrees that actions to address overfishing should not be constrained unnecessarily. Section 304(e)(6) of the Magnuson-Stevens Act states that interim measures can be requested by a Council during its development of an FMP, an FMP amendment, or proposed regulations to address overfishing as required under section 304(e), until such measures can be replaced by such FMP, amendment, or regulations. Section 305(c)(3)(B) of the Magnuson-Stevens Act establishes time constraints on interim actions and makes extensions contingent upon the Council's actively preparing an FMP, FMP amendment, or proposed regulations to address overfishing on a permanent basis. Section 600.310(e)(6) of the guidelines reflects these statutory requirements.

Comment 31. One commenter objected to statements in § 600.310(f)(1)(ii) and (f)(5)(i) to the effect that OY cannot be achieved on a continuing basis if status determination criteria are not met. The commenter contended that the purpose of the status determination criteria is to measure FMP performance, not to control fishing, and that the present wording of the guidelines might preclude a Council from taking a gradual approach toward bringing fishing mortality into conformity with the maximum fishing mortality threshold.

Response. No change was made. NMFS believes that status determination criteria are indeed intended to control fishing. The commenter is correct insofar as the guidelines would preclude a Council from taking a gradual approach toward bringing fishing mortality into conformity with the maximum fishing mortality threshold. Once a Council is notified that overfishing is occurring, it must take action within 1 year to end overfishing. A gradual approach is not permitted.

Comment 32. One commenter suggested that the guidelines should include a clear statement to the effect that, whenever overfishing is occurring, remedial action is required.

Response. No change was made. The statement already appears in § 600.310(e)(3)(i).

Comment 33. One commenter suggested that the guidelines should encourage adoption of target harvest levels set safely below MSY.

Response. No change was made. The statement already appears in § 600.310(f)(5)(i).

Comment 34. Several commenters suggested that § 600.310(f)(2)(i) and (f)(2)(ii) under emphasized the benefits to the Nation accruing from food production relative to those accruing from recreational opportunities. Two commenters suggested that contributions to the surrounding economies ought to be listed as a benefit accruing from food production, as well as from recreational opportunities. One commenter suggested that the guidelines seemed to equate recreational fishing with non-consumptive use and commercial fishing with consumptive use, giving the impression that recreational fishing does not contribute to food production. One commenter was concerned regarding the vague nature of the ''other non-consumptive activities'' that were suggested to be ''important to the national, regional, and local economies'' in § 600.310(f)(2)(ii).

Response. Sections 600.310(f)(2)(i) and (f)(2)(ii) have been revised. NMFS believes that neither the benefits to the Nation accruing from food production nor those accruing from recreational opportunities should be under emphasized. Contributions to the national, regional, and local economies are now listed as benefits accruing from both food production and recreational opportunities. Contrary to one of the comments cited, the proposed rule explicitly acknowledged the contribution of recreational fishing to food production; this acknowledgment is retained in the revised language. The non-specific reference to ''other non-consumptive activities'' has been deleted from § 600.310(f)(2)(ii), insofar as this paragraph is not intended to provide an exhaustive list of non-consumptive uses.

Comment 35. Several commenters disagreed with the proposed guidelines' allowance of an exception to the requirement of preventing overfishing,

in the case of one stock component of a mixed-stock fishery. They said that the legislative history of the SFA supports elimination of this exception, and challenged NMFS' authority to retain it.

Response. The legislative history of the SFA does not directly address this issue. The statute defines ''overfishing'' and ''overfished'' in terms of the capacity of a fishery to produce MSY. National standard 1 requires conservation and management measures to prevent overfishing while achieving the OY from each fishery. Section 304(e) of the Magnuson-Stevens Act requires the Secretary to identify fisheries that are being overfished. The Council must then take steps to end overfishing in the fishery.

A ''fishery'' is defined in the Magnuson-Stevens Act as ''one or more stocks of fish which can be treated as a unit for purposes of conservation and management.'' In a mixed-stock fishery, several stocks are harvested together and are managed as a unit. From the SFA's focus on ''fisheries,'' and the fact that it did not amend national standard 1, NMFS infers that Congress did not mean to eliminate entirely the long-standing practice of allowing a mixed-stock fishery to continue, if certain conditions specified in the guidelines were met.

To respond to concerns that this exception might become a huge loophole, the proposed guidelines considerably narrowed this exception from the existing guidelines. To allow overfishing of one stock in a mixed-stock fishery, a Council must meet three stringent conditions: (1) It must demonstrate by analysis that the action will result in long-term net benefits to the Nation; (2) it must demonstrate by analysis that a similar level of benefits cannot be achieved by modifying fleet behavior, gear selection or configuration, or other technical characteristic so that no overfishing would occur; and (3) it must ensure that the action will not cause any species or evolutionarily significant unit thereof to require protection under the Endangered Species Act.

The exceptions for mixed-stock fisheries have thus been significantly constrained by requiring that (1) demonstrated net benefits to the Nation be long-term, rather than short-term; (2) an analysis be performed to consider technical or operational alternatives to overfishing; and (3) the stock or stock complex not be driven to a dangerously low level.

NMFS believes the guidelines strike the correct balance between preventing a stock from becoming overfished and achieving OY for the fishery as a whole.

Comment 36. The notice reopening the comment period asked whether overfishing evaluations and rebuilding programs should be focused on individual stocks, or on a fishery. In response, many commenters pointed out that a stock-by-stock approach is the only scientifically justified method. Overlooking the condition of each stock is also inconsistent with Congressional intent to rebuild all fishery resources. Other commenters wanted to focus on fisheries, as part of an ecosystem approach to management. A mixed stock fishery should be managed as a unit, and should not be closed just because one component of the fishery is overfished.

Response. A fishery comprised of many stocks cannot be judged as overfished or not; only for a stock or stock complex of fish can measurable, objective criteria of overfishing be established, as required by the SFA. The same concern applies to judging whether a fishery has been rebuilt; biologically, that can be determined only on a stock or stock complex basis. The Secretary's first report to Congress (September 30, 1997, under section 304(e)) identified stocks, not fisheries, as overfished.

Focusing on stocks as a scientific endeavor is not inconsistent with managing a fishery as a unit. As explained in the response to comment 35 under national standard 1, identification of a stock as overfished does not necessarily mean that the entire fishery in which it occurs must be severely constrained while that stock is rebuilt. Scientific judgments on overfishing and rebuilding must be made, to the extent practicable, on a stock-by-stock basis, but management judgments on optimizing benefits can be made on the fishery as a whole. In other words, managers should be aware of the biological status of each stock, and should also be required to justify the continuation of overfishing of a stock in a mixed-stock fishery on the grounds of maximizing benefits.

Comment 37. One commenter suggested that a discussion of ''acceptable biological catch'' (ABC) be included in the guidelines, as in the 1989 version. The commenter felt that ABC is used by most, if not all, of the Councils and in many FMPs.

Response. No change was made. NMFS believes that ABC, as typically used, is an example of the ''annual target harvest levels that vary with stock size'' described in § 600.310(f)(4)(ii). Given that the term ''acceptable biological catch'' does not appear in the Magnuson-Stevens Act (although ''allowable biological catch'' is used once, without definition, in section 303(b)(11)), NMFS does not believe that it is necessary to reference this additional term by name in the guidelines.

Comment 38. One commenter objected to specifying minimum stock size threshold as a function of MSY stock size, as in § 600.310(d)(2)(ii). The commenter was concerned that extreme changes in environmental conditions could lead to extreme changes in carrying capacity and could result in a mismatch between the minimum stock size threshold and the stock's new productive capacity.

Response. No change was made. Section 600.310(d)(4)(ii) requires that status determination criteria be respecified if changes in environmental conditions cause the long-term productive capacity of the stock or stock complex to change. (See also the response to comment 18 for national standard 1).

Comment 39. One commenter objected to the statement in § 600.310(f)(5)(i) that continual harvest at a level above OY would violate national standard 1, even if no overfishing resulted. The commenter felt that it is both physically and fiscally impossible to assure that quotas are not systematically exceeded.

Response. No change was made. NMFS believes that the national standard 1 mandate for ''achieving, on a continuing basis, the OY from each fishery'' should not be interpreted to mean, ''achieving, on a continuing basis, the OY or some greater amount of harvest from each fishery.'' By definition, MSY is the greatest amount of harvest that could be achieved from a fishery on a continuing basis. Presumably, the reason that the Magnuson-Stevens Act makes explicit provision for setting OY at a level below MSY is that, where justified on the basis of relevant economic, social, or ecological factors, continual harvest at a higher level (such as MSY) is to be avoided. NMFS' experience has been that it is indeed possible to assure that quotas are not systematically exceeded. If, however, a Council finds that a systematic amount of harvest overrun is inevitable, quotas should be reduced by that amount.

Comment 40. Several commenters suggested that the guidelines list examples of management actions required under a variety of fishing mortality rates and stock sizes.

Response. No change was made. NMFS believes there are so many variables and contingencies specific to each fishery that it would not be meaningful to list examples of the type

requested. In general, though, it is clear that a Council's primary control will be over fishing mortality. If the fishing mortality rate on a stock or stock complex exceeds the maximum fishing mortality threshold, it must be reduced to the extent that it no longer exceeds that threshold, as described in § 600.310(e)(3)(i) and (e)(4)(i). If a stock or stock complex is overfished, fishing mortality must be controlled such that the stock rebuilds to the MSY level within a time period satisfying the statutory requirements, as described in § 600.310(e)(3)(ii) and (e)(4)(ii).

Comment 41. In discussing fisheries that have large state components, one commenter said that states will have to cooperate to achieve the SFA's rebuilding objectives. He recommended that the possibility of preempting a state's authority over a fishery in its waters be specified in the guidelines.

Response. The criteria and procedures for Federal preemption of state authority are set out in section 306(b) of the Magnuson-Stevens Act. In addition, NMFS would also comply with applicable requirements of Pub. L. 104–4, the Unfunded Mandates Reform Act of 1995, and E.O. 12612, Federalism. NMFS sees no reason to reiterate these requirements in the guidelines, but agrees that consultation and state cooperation will be essential in meeting rebuilding schedules for some fisheries.

Comment 42. One commenter stated that the guidelines should clearly point out that the SFA imposes the obligation to establish a strong domestic plan to rebuild stocks, within 10 years if biologically possible, and that obligation applies to international as well as domestic fisheries.

Response. NMFS agrees that the obligation to establish a strong domestic plan to rebuild stocks, within 10 years if biologically possible, is a requirement of the SFA, regardless of the species involved. The guidelines, as proposed, reflect this view. There is no exception provided in the guidelines for any species or fishery beyond that provided in the SFA (section 304(e)(4)(C)). NMFS notes that the SFA requires that any rebuilding program for fisheries managed under an international agreement must reflect traditional participation in the fishery, relative to other nations, by fishermen of the United States. NMFS does not agree that additional clarifying language is necessary in the guidelines.

Comment 43. With respect to highly migratory species such as tunas and billfish, one commenter believed expressions of yield and overfishing are meaningless on local scales. The commenter questioned what is required of the Councils and what the limits of authority are regarding ending overfishing and rebuilding overfished stocks in areas where the majority of the exclusive economic zone (EEZ) stock/fishery occurs in state waters (e.g., onaga) or in international waters (e.g., armorhead) where no agreements exist.

Response. The Councils have the responsibility under SFA to do all they can to eliminate overfishing and to rebuild overfished stocks. The Councils are limited in their authority and their ability to correct overfishing in many cases. However, this limitation should not prevent the Councils from doing everything within their authority and capabilities to address overfishing. (See also the response to comment 33 under national standard 1.)

Comment 44. One commenter was concerned regarding NMFS' proposed requirement to implement regulations to end (or prevent) overfishing and to rebuild (or sustain) affected fish stocks that are considered to be overfished or approaching an overfished condition. The commenter objected to this provision's application to migratory fish stocks with international harvesters, especially when the majority of the harvest is taken by foreign fleets.

Response: The SFA provisions concerning overfishing and rebuilding migratory fish stocks are not restricted to those situations where the U.S. harvest is a majority of the total fishing mortality. The SFA does, however, recognize the international aspects of migratory species, and provides that the period for rebuilding may exceed 10 years if management measures under an international agreement so dictate. And, as noted in the response to comment 33 under national standard 1, the rebuilding program for fisheries managed under an international agreement must reflect traditional participation in the fishery, relative to other nations, by fishermen of the United States. The guidelines reflect these provisions of the SFA.

Comment 45. One commenter said the proposed rule states that all fishing mortality must be counted against OY, including that resulting from bycatch, research fishing, and any other fishing activities, although the Magnuson-Stevens Act (section 3(15)) defines fishing in a way that does not include scientific research activity that is conducted by a scientific research vessel.

Response. The proposed guidelines have been revised to reflect the fact that the term ''fishing'' does not include any scientific research activity that is conducted by a scientific research vessel. In § 600.310(f)(4)(iii), the words ''research fishing'' have been changed to ''scientific research.'' However, the fishing mortality that occurs during scientific research requires estimation and inclusion in the accounting of all harvesting mortality to which stocks are subjected.

Comment 46. One commenter stated that overfishing criteria do not provide any explicit treatment for hatchery stocks. The commenter assumed that hatchery stocks cannot be aggregated with wild stocks for the purposes of establishing overfishing criteria.

Response. NMFS agrees with the commenter's assumption that hatchery stocks cannot be aggregated with wild stocks for purposes of establishing overfishing criteria.

National Standard 2

Comment 1. One commenter suggested that NMFS should encourage the policy that fisheries management must be based on scientific facts.

Response. NMFS agrees, and recognizes that additional factors, such as social and economic impacts, must be taken into consideration in formulating management measures.

Comment 2. One commenter stated that the guidelines for national 2 should expressly address data on bycatch and safety.

Response. NMFS agrees and has amended § 600.315(e)(1)(ii) to include safety. That section already includes a reference to bycatch.

Comment 3. One commenter stated that data reporting requirements in national standard 2 are too burdensome and will inhibit fisheries management.

Response. Section 301(a)(2) of the Magnuson-Stevens Act requires that conservation and management measures be based on the best scientific information available. The minimum information sets required in FMPs are described in section 303(a) and (b) of the Magnuson-Stevens Act. The guidance provided in § 600.315 summarizes those statutorily required minimum requirements. Moreover, the Paperwork Reduction Act requires NMFS to minimize the burden of its information collection by ensuring the information will have practical utility.

Comment 4. Two commenters suggested there should be more explicit guidance under national standard 2 regarding the data requirements related to fishing communities.

Response. NMFS agrees. The language in § 600.315(e)(1) introductory text has been revised to clarify that Stock Assessment and Fishery Evaluation (SAFE) reports are intended to summarize the most recent information

concerning a variety of aspects of the fishery, including fishing communities.

National Standard 4

Comment 1. One commenter suggested that the guidelines for national standard 4 should be modified by adding: ''In all [FMPs] prepared by any Council in a limited access fishery, all permits must be treated equally and fairly.''

Response. No change was made. The criteria that a Council must use in developing a limited access program are listed in the Magnuson-Stevens Act (section 303(b)(6)). National standard 4 requires that all allocations, including limited access permits, be handled fairly and equitably.

Comment 2. One commenter suggested that national standard 4 should contain a strict prohibition that prevents any one state (such as Alaska) from being granted (by any Council) monopoly control of fisheries management in Federal waters where fishermen from several states harvest under an approved FMP.

Response. The Magnuson-Stevens Act provides that a state may regulate a fishing vessel outside the boundaries of that state (section 306(a)(3)). However, management measures developed by a state pursuant to this authority may not discriminate between residents of different states. Mechanisms exist for ensuring that such authority does not result in unfair treatment. For example, two North Pacific Fishery Management Council FMPs that defer the majority of management authority to the State of Alaska (the crab and salmon FMPs) have mechanisms that provide for individuals to challenge the State's management actions.

Comment 3. One commenter stated that fishing sectors such as subsistence fishing and aboriginal people indigenous to the region should be added to the commercial, recreational, and charter fishing sections identified.

Response. No change was made. The Magnuson-Stevens Act already requires that all fishermen should be treated fairly and equitably.

National Standard 5

Comment 1. Several commenters stated that the guidelines do not adequately reflect the revision from ''promoting economic efficiency'' to ''considering economic efficiency'' in national standard 5, particularly in the use of the term ''encouraging'' relative to efficient utilization.

Response. NMFS agrees that the word ''encouraging'' should be replaced with ''considering,'' to make this standard consistent with the intent of Congress; § 600.330(b)(1) has been revised accordingly. The reference to limited access systems is only an example of a program that may contribute to efficiency. No statements or references are made that limited access is a preferred alternative to increase efficiency.

Comment 2. One commenter stated that the use of the phrase ''least cost to society'' in the national standard 5 guideline is inappropriate, because achieving long-term benefits may require costs that are greater than the least available.

Response. The use of this phrase is similar to its use in the national standard 7 guideline, which refers to minimizing costs. The phrase does not mandate that the alternative with the lowest cost be selected. Rather, it is meant to provide guidance that efficient utilization of resources is a way to achieve benefits for the Nation, while limiting the costs to society. Analysis of alternative management measures, including those that would offer greater efficiency, are expected to estimate the relative benefits and costs of those measures.

National Standard 7

Comment 1. One commenter suggested that the Councils should be required to prepare an FMP for any fishery that has recreational and/or commercial catch.

Response. The Magnuson-Stevens Act did not impose such a requirement. The national standard guidelines do not excuse the Councils from developing FMPs that are necessary or appropriate. The guidelines prior to the SFA stated that an FMP should be prepared only for fisheries in need of management. NMFS believes no change is necessary, because requiring an FMP for every fishery could redirect critical funds needed for resource surveys, data collection, data or impact analyses, or other essential activities, but result in little or no incremental benefit to the Nation.

National Standard 8

Comment 1. One commenter stated that the definition of ''fishing communities'' needs to be amended to include all components of the recreational industry.

Response. No change was made. The definition of ''fishing community'' in the guidelines already includes recreational fishing or directly related fisheries-dependent services and industries.

Comment 2. One commenter stated that ''sustained participation'' referred to in this standard does not guarantee any specific rights, practices, or access to a specific fishery. Two other commenters stated that the intent of Congress in reference to ''sustained participation'' was not to cause fishermen to change gear or species, particularly since some communities are dependent on specific gears and/or fisheries.

Response. No change was made. ''Sustained participation'' means continued access to the fishery within the constraints of the condition of the resource. This standard requires that the importance of fishery resources to a community be taken into account in conservation and management measures; however, the long-term conservation and/or rebuilding of stocks may require limits on particular gears and the harvest of specific stocks.

Comment 3. One commenter stated that proposed § 600.345(b)(2) captures the intent of Congress that this standard does not allocate resources to particular communities, while § 600.345(c)(3) has implicitly allocative language in its focus on ''levels of dependence on and engagement in'' the fishery.

Response. No change was made. The language in § 600.345(c)(3) reflects the meaning of the Magnuson-Stevens Act, which refers to communities being ''substantially engaged'' and ''substantially dependent.'' The levels of dependence on and engagement in a fishery need to be ascertained in order to identify communities, whether located in rural or metropolitan areas, that may be potentially affected. Further, dependence, engagement, and sustained participation are not measured solely in terms of the percent of fishing activity in relation to the entire economic base of the community; there are other social, cultural, and economic assessments specifically focused on the harvesting, processing, and fishery-support industries.

Comment 4. One commenter stated that, in § 600.345(b) and (c), the definitions and explanations are so broad as to render them useless in identification of fishing communities.

Response. NMFS disagrees. The guidance reflects the language and intent of Congress to be inclusive of fishing communities. The definitions and explanations in § 600.345(b) and (c) are acceptable operational definitions for use by social scientists and economists in undertaking data gathering and analysis.

Comment 5. One commenter stated that, in § 600.345, all components of the recreational fishing industry in fishing communities should be described and analyzed in the same manner and depth as commercial fishery components.

Response. NMFS agrees. The guidance in the national standard guidelines covers all sectors.

National Standard 9

Comment 1. Several commenters stated that the guidelines as written diverged significantly from the statute and Congressional intent and require a substantial rewriting. One commenter was concerned that the Councils would not have to take action to amend their FMPs to minimize bycatch and would still be found to be in compliance with national standard 9.

Response. NMFS disagrees. The Councils and NMFS must review all existing FMPs and all future FMPs and FMP amendments for compliance with national standard 9. Existing FMPs will be amended, if necessary, to ensure compliance with this standard. The Councils are required to re-examine the conservation and management measures contained in their FMPs for ways to reduce bycatch below current levels. In addition, the Councils must revisit the measures periodically to ensure that bycatch is reduced as much as practicable. No change in the guidelines is necessary.

Comment 2. Several commenters stated that the SFA sent a very clear message that bycatch is a serious problem and that the Councils are required not to study the problem, as suggested in the proposed guidelines, but to amend FMPs to include measures to ''minimize bycatch and to minimize the mortality of such bycatch that cannot be avoided.''

Response. NMFS agrees that bycatch is a problem in many of the Nation's fisheries. The amendments to the Magnuson-Stevens Act require that conservation and management measures minimize bycatch to the extent practicable and, to the extent bycatch cannot be avoided, minimize the mortality of such bycatch. The requirement is clearly not discretionary. NMFS disagrees that the guidelines only require the Councils to study the bycatch problem; the Councils must take action to minimize bycatch and bycatch mortality to the extent practicable. No change in the guideline is necessary (also see the response to comment 1 under national standard 9).

Comment 3. Several commenters observed that national standard 9 recognizes bycatch as an integral component of the total fishery, with biological if not economic value. The commenter stated that this national standard encourages the redeployment, or perhaps the elimination, of destructive, non-selective gears.

Response: NMFS agrees. The Councils have a range of options available to them to satisfy the requirements of national standard 9; the commenter mentioned only two of the options available. However, the legislative history of the SFA includes a floor statement by Congressman Young that ''it is not the intent of Congress that the [Councils] ban a type of fishing gear or a type of fishing in order to comply with this standard.''

Comment 4. One commenter observed that national standard 9 applies not only to commercially valuable species, but also to all finfish, shellfish, and invertebrate species with no commercial value.

Response. NMFS agrees. The definition of ''fish'' in the Magnuson-Stevens Act includes finfish, shellfish, and invertebrate species, and all other forms of marine animal and plant life except marine mammals and birds; by extension, bycatch applies to these forms of marine life.

Comment 5. One commenter stated that the guidelines are not clear on exactly what is required for compliance with this national standard and what the consequences would be of not meeting that requirement. The commenter also suggested that such requirements would likely not be followed because they are too time/staff/data intensive. Another commenter stated that the guidelines suggest that measures to minimize bycatch need not be implemented if they are determined to be ''inconvenient'' with respect to, for example, ''changes in fishing, processing, disposal, or marketing costs,'' or ''changes in fishing practices and the behavior of fishermen.''

Response. The Secretary is required to ensure that all FMPs are in compliance with the national standards. FMPs or FMP amendments that are not in compliance will not be approved. Inconvenience is not an excuse; bycatch must be avoided as much as practicable, and bycatch mortality must be reduced until further reductions are not practicable. Adherence to the national standards is not discretionary.

Comment 6. One commenter suggested that, in the definition of bycatch in § 600.350(c), NMFS strike the parenthetical in the definition of bycatch and the phrase, ''or that enter commerce through sale, barter, or trade.''

Response. The language in § 600.350(c) is consistent with the Magnuson-Stevens Act; commercial fishing, as defined in section 3(4), ''means fishing in which the fish harvested, either in whole or in part, are intended to enter commerce or enter commerce through sale, barter or trade.'' While the term ''sale'' is inclusive of barter and trade, the phrase has been kept in the guidelines to ensure that there is no ambiguity as to what is considered bycatch. NMFS believes the parenthetical in the definition of ''bycatch'' provides useful clarification of ''harvested in a fishery.'' No change was made.

Comment 7. Several commenters recommended removing the definition of discard in proposed § 600.350(c)(2) because they believed the term was included by NMFS without support in the Magnuson-Stevens Act or its legislative history. They stated that the definition is in conflict with the law and allows the continuation of fishing methods and practices that involve great amounts of bycatch, like roe stripping and shark finning.

Response. The definition in § 600.350(c)(2) has been removed; however, NMFS has retained the interpretation that ''bycatch'' includes the discard of whole fish—not the discard of unwanted parts. Nothing in the definitions of ''bycatch'' or ''economic discards'' suggests that the discard of unwanted parts of fish is addressed accordingly (see the response to comment 12 under national standard 9 for a discussion of practices such as shark finning).

Comment 8. One commenter requested that NMFS add to the last sentence in the definition of bycatch in § 600.350(c) the words ''or Atlantic highly migratory species harvested in a commercial fishery that are not regulatory discards and that are tagged and released alive under a scientific tag and release program established by the Secretary.''

Response. NMFS agrees and has added the suggested language to § 600.350(c).

Comment 9. A commenter asked whether any fish caught and sold would be considered bycatch.

Response. According to the definition of bycatch in the Magnuson-Stevens Act, the sale of any fish removes it from being considered bycatch.

Comment 10. A commenter stated that fish that are ground up and thrown overboard are not counted as discards.

Response. NMFS disagrees. Whole fish that are ground up and thrown overboard would be considered bycatch.

Comment 11. One commenter suggested that, in § 600.350(b), the second sentence be replaced with: ''Bycatch can, in four ways, impede efforts to protect marine ecosystems, achieve sustainable fisheries and the full benefits that they provide to the Nation.'' The suggestion was also made

that the following sentence be added to § 600.350(b): ''First, removing unknown amounts of commercial or non-commercial biomass as bycatch affects marine ecosystems in ways that are poorly understood at best.''

Response. The first suggestion was adopted, because sustainable fisheries are predicated on healthy marine ecosystems. In addition, § 600.350(b) was revised to combine the concepts of increased uncertainty concerning total fishing related mortality and the impact of bycatch on other uses of fishery resources.

Comment 12. One commenter stated that portions of fish not used or retained (e.g., finned sharks) are incidental catch (and are therefore bycatch). Other commenters stated that sharks could be harvested for fins and discarded without being counted as discards.

Response. The Magnuson-Stevens Act does not define incidental catch; however, it defines ''bycatch'' as fish that are harvested in a fishery, but that are not sold or kept for personal use. The Magnuson-Stevens Act does not specify that the entire animal or plant must be sold or kept for personal use. This does not mean, however, that wasteful practices should not be of concern, nor that they may not be restricted by the Councils on some other basis. The issue of how much of a fish should be retained is a utilization issue, which is distinct from the bycatch issue.

Comment 13. One commenter stated that damaged and/or mutilated (e.g., shark-bitten) target species that are discarded are bycatch.

Response. NMFS agrees. Such fish are considered bycatch if they are not sold or kept for personal use.

Comment 14. Economic discards of target species, such as tunas during times of market surplus, including dumping of fish on land, are bycatch.

Response. NMFS agrees. Such discards are considered bycatch.

Comment 15. One commenter observed that the Magnuson-Stevens Act's definition of bycatch does not mention unobserved fishing mortality and recommended that the parenthetical inclusion of unobserved fishing mortality in the definition of bycatch in § 600.350(c) of the regulations should be removed.

Response. NMFS disagrees. The statute does not limit Council actions only to observed bycatch. Unobserved fishing-related mortality is implicitly included in the definition because it constitutes a harvest of fish that are not sold or kept for personal use. NMFS notes, however, that there is little information available on unobserved fishing-related mortality and believes that primary emphasis should initially be placed on minimizing observed sources of fishing-related mortality.

Comment 16. One commenter noted that unobserved fishing-related mortality should be given prominence in the proposed guidelines.

Response. NMFS disagrees. Given the many sources of bycatch mortality, NMFS believes that unobserved fishing-related mortality is sufficiently prominent in the guidelines as proposed.

Comment 17. One commenter asked how NMFS will ever assign a poundage to unobserved mortality and what scientific basis will be used to determine unobserved mortality.

Response. NMFS recognizes that determining unobserved fishing mortality will be extremely difficult. However, all significant sources of fishing-related mortality need to be considered when developing conservation and management measures. While there are some existing technologies that could be used to estimate unobserved fishing mortality (e.g., video-based systems), new methods will need to be developed. This will involve an experimental process, including rigorous peer reviews of the results.

Comment 18. One commenter noted that the amount of discards by the recreational fishery has a significant impact on fish stocks.

Response. NMFS agrees. Discards by recreational anglers are considered to be bycatch unless they are specifically exempted in the Magnuson-Stevens Act. All mortality associated with recreationally caught fish must be considered in the determination of OY and MSY; this is addressed in the guidelines for national standard 1.

Comment 19. One commenter observed that fish released alive in recreational catch-and-release and tagging programs do die and should be counted as bycatch and against OY.

Response. NMFS agrees that all bycatch mortality and mortality attributable to exempted tagging and release programs should be considered in determination of OY. As noted in the response to comment 25 under national standard 9, the Magnuson-Stevens Act exempts only Atlantic highly migratory species harvested in a tag-and-release program established by the Secretary. This is further addressed in the guidelines to national standard 1.

Comment 20. One commenter stated that the SFA specifically excludes recreational catches from the requirements for bycatch reduction and avoidance. The commenter felt that a specific reference to the value of catch-and-release fisheries under the guidelines to national standard 9 would be useful.

Response. NMFS disagrees. Fish caught and released alive under an approved catch-and-release fishery management program are exempt from being considered bycatch under section 3(2) of the Magnuson-Stevens Act (see also the response to comment 21 under national standard 9). Management regulations (e.g., minimum size limits and bag limits) that result in the release of fish by recreational anglers are not considered catch-and-release programs and, therefore, such catches are considered to be bycatch, even though the fish are released alive. Increased efforts to release recreationally caught fish in healthy condition may partially satisfy the requirement in national standard 9 that mortality of bycatch that cannot be avoided be minimized to the extent practicable.

Comment 21. One commenter asked what is meant by the exclusion of ''fish released alive under a recreational catch-and-release fishery'' under the bycatch definition.

Response. A definition of the term ''catch-and-release fishery management program'' has been added to Section 600.350(c) as follows: a catch-and-release fishery management program is one in which the retention of a particular species is prohibited. In such a program, those fish released alive would not be considered bycatch.

Comment 22. One commenter stated that highly migratory species in a commercial fishery managed by the Secretary that are tagged and released alive in the Atlantic are not considered bycatch. The same commenter asked whether the provision also extended to Pacific highly migratory species managed by the Western Pacific Council, and if not, why not?

Response. NMFS agrees that the Magnuson-Stevens Act specifically exempted fish caught in highly migratory species tag-and-release programs in the Atlantic from being considered bycatch. This exemption was not extended in the SFA to Pacific highly migratory programs. Therefore, fish tagged and released in highly migratory species tag-and-release programs in the Pacific are considered bycatch.

Comment 23. One commenter stated that definitions of bycatch as ''catch which is not retained or utilized'' and incidental catch as ''catch which is retained in whole or part but not necessarily targeted,'' as adopted by the Western Pacific Fishery Management Council, are not consistent with the Magnuson-Stevens Act or with the

proposed national standard 9 guidelines.

Response. The Western Pacific Council's definition of ''bycatch,'' though not identical, is not inconsistent with the new definition in the Magnuson-Stevens Act. The definition of ''incidental catch'' is not inconsistent with anything in the Act or the guidelines.

Comment 24. Several commenters disagreed with the following statement in the preamble to the proposed guideline: ''Bycatch can be decreased either by decreasing the catch of fish that would be discarded or by retaining fish that would otherwise be discarded.'' They also stated that avoidance should take precedence over retention and that retention of bycatch fails both tiers of national standard 9 in that it neither avoids nor minimizes it.

Response. NMFS agrees that priority must first be given to avoiding bycatch to the extent possible. To the extent that it is not possible, priority must then be given to minimizing bycatch mortality. Any proposed conservation and management measure that does not give first priority to avoiding the capture of bycatch species must be supported by appropriate analyses, including determination of the net benefits to the Nation. Section 600.350(d) introductory text has been revised accordingly. Sections 313(i) and 405(d)(3) of the Magnuson-Stevens Act suggest that retention and utilization are viable solutions to some bycatch problems.

Comment 25. Several commenters stated that the proposed rule would make national standard 9 a discretionary option for the Councils by using the word ''should'' at the end of § 600.350(d). The commenters believed the proposed guidelines fail to require any Council to select and implement measures to minimize bycatch.

Response. The requirements of the Magnuson-Stevens Act are not discretionary. The Councils must consider the requirements in § 600.350(d) when evaluating conservation and management measures relative to the national standards. To ensure that this point is made, the word ''should'' in § 600.350(d) introductory text has been changed to ''must'' to emphasize the mandatory nature of Council actions under this national standard.

Comment 26. One commenter stated that the proposed language for national standard 9 neglected to include ''to the extent practicable'' when discussing reduction of mortality of bycatch that cannot be avoided. The commenter stated that Congress explicitly recognized that the costs of reducing bycatch at some level outweigh the benefits, and that the Magnuson-Stevens Act does not demand that bycatch be decreased to the point of technical feasibility, just to the point that it still makes sense to reduce it.

Response. NMFS agrees; the guidelines already contain the language suggested. For the purposes of this national standard, the term ''practicable'' is not synonymous with the term ''possible,'' because not all reductions that are possible are practicable. NMFS recognizes that in some fisheries it may not be practicable to eliminate all bycatch and bycatch mortality.

Comment 27. One commenter stated that, as stocks approach overfished conditions or are below their optimum levels, harvests (including bycatch) should be limited to well below the threshold at which there is a risk of precipitating or contributing to a decline.

Response. NMFS agrees. Bycatch mortality is a component of total fishing mortality and must be incorporated into stock assessments. To the extent that stock assessments include information on the types and magnitude of bycatch, total allowable catch determinations will reflect that information.

Comment 28. Several commenters stated that the guidelines ought to point out specifically that economics cannot justify bycatch that has a negative impact on the health of any stock in a multispecies fishery.

Response. NMFS agrees. The primary responsibility of the Councils is to develop conservation and management measures that, to the extent practicable, minimize the capture of bycatch species and that, to the extent bycatch cannot be avoided, minimize the mortality of such bycatch. The economic consequences of dealing with bycatch is one of the factors that determines the extent to which it is practicable to reduce bycatch or bycatch mortality in a particular fishery. The determination must be based on the net benefits to the Nation resulting from particular management measures. Language has been added to § 600.350(d) introductory text to indicate that the net benefits to the Nation include, but are not limited to, negative impacts on affected stocks; incomes accruing to participants in directed fisheries in both the short and long term; incomes accruing to participants in fisheries that target the bycatch species; environmental consequences; non-use values of bycatch species, which include non-consumptive uses of bycatch species and existence values, as well as recreational values; and impacts on other marine organisms.

Comment 29. One commenter believed that, by allowing the Councils to prioritize their actions to address bycatch, NMFS would effectively (and unfairly) penalize those fisheries that have voluntarily collected and submitted bycatch data. The commenter felt that bycatch reduction should be done in a coordinated fashion, involving all harvesters.

Response. NMFS disagrees with the first part of the comment. The collection of such data was voluntarily initiated by the fishing industry because it was recognized that bycatch is a problem that must be dealt with; the fishing industry is to be commended for taking initiative in dealing with bycatch. The guidelines specifically list activities that the Councils must undertake to satisfy the requirements of this national standard. No fishery is exempt from the requirements. However, for practical reasons, the Councils will have to determine their priorities for development of management actions and the basis for setting those priorities.

Comment 30. One commenter stated that non-selective, destructive gear—specifically longlines, gillnets, and trawls—ought to be specifically mentioned in the section on bycatch as gear to which special attention ought to be paid in the development of any fishery management measures.

Response. NMFS disagrees. The Councils will need to prioritize their actions, not only with respect to various fisheries, but also to various gears. The Councils will need to determine, during the development of fishery management measures, which gears to allow and which ones need special attention. No change in the guidelines is necessary.

Comment 31. Several commenters suggested that SAFE reports are important tools in minimizing bycatch and that a requirement be added that information on the amount and type of bycatch be summarized in the SAFE report.

Response. NMFS agrees and has added appropriate language to § 600.350(d)(2). NMFS notes that § 600.315(e)(1)(ii) of the guidelines for national standard 2 already contains this requirement.

Comment 32. Several commenters stated that the list of factors in § 600.350(b)(3) is comprehensive and invites the Councils to use those factors as loopholes to avoid taking action. Commenters questioned why such a comprehensive list is needed for this standard and none of the others.

Response. NMFS disagrees. The lack of complete and perfect information is

not an excuse for not taking action. Uncertainty concerning the desirable and undesirable effects of minimizing bycatch and bycatch mortality should be dealt with similarly. (See also the response to comment 35 under national standard 9).

Comment 33. One commenter stated that there are no criteria or methods for establishing criteria for determining how much bycatch is too much.

Response. NMFS disagrees. Section 600.350(d)(3) provides a list of criteria for evaluating the impacts of bycatch. Each Council must determine how much bycatch is too much by balancing the various factors that will maximize the net benefits to the Nation (see also the response to comment 24 under national standard 9). Language that includes the maximization of net benefits to the Nation has been added to § 600.350(d)(3). The legislative history of the SFA includes the following floor statement by Congressman Young: ''Practicable' requires an analysis of the cost of imposing a management action; the Congress does not intend to ...impose costs on fishermen and processors that cannot be reasonably met.''

Comment 34. Several commenters stated that Councils should prioritize their actions to address those fisheries that have not only the greatest bycatch rate, but also the greatest amount of bycatch.

Response. NMFS agrees that the Councils will need to prioritize their actions to address those fisheries where actions to reduce bycatch can have the greatest impact. Each Council will have to determine the basis for setting its priorities.

Comment 35. One commenter stated that the final rule must clearly reflect that Councils are not constrained from acting when faced with uncertainty surrounding one or several items included in § 600.350(d)(3).

Response. NMFS agrees. The Councils must take action to ensure the sustainability of the Nation's marine fishery resources. National standard 2 specifically requires that conservation and management measures be based on the best scientific information available. Where there is uncertainty surrounding any of the items in § 600.350(d)(3), Councils should adhere to the precautionary approach stated in the Food and Agriculture Organization of the United Nations (FAO) Code of Conduct for Responsible Fisheries (Article 6.5). The Code specifically states, ''The absence of adequate scientific information should not be used as a reason for postponing or failing to take measures to conserve target species, associated or dependent species and non-target species and their environment.'' Language to that effect has been added to § 600.350(d)(3).

Comment 36. Several commenters noted that requirements to implement monitoring programs in FMPs may prevent approval. Such requirements could be an administrative burden for the Councils and be very costly to implement.

Response. NMFS disagrees. Section 303(a)(11) of the Magnuson-Stevens Act specifically requires the Councils to establish, for each fishery, a ''standardized reporting methodology to assess the amount and type of bycatch occurring in the fishery.'' The statute makes no allowance for the financial or administrative burden of establishing such reporting programs. It is clear that, in order to be able to assess the amount and type of bycatch occurring in various fisheries, monitoring programs must be established.

Comment 37. One commenter stated that data collection from all fishermen must be made a high priority.

Response. NMFS agrees and notes that the uncertainty surrounding estimates of the types and amounts of bycatch cannot be reduced without the cooperation and involvement of all components of the fisheries.

National Standard 10

Nine commenters commented specifically on national standard 10. All were positive and most substantive comments were directed at making the standard more restrictive. Several commenters gave unqualified support to the standard. One commenter urged that NMFS work aggressively with the Councils ''to ensure that safety is constantly considered in fishery management.''

Comment 1: One commenter noted that no criteria were provided for the phrase ''to the extent practicable'' in national standard 10, as were provided for national standard 9.

Response: NMFS disagrees. Section 600.355(b)(2) directly addresses these concerns.

Comment 2: One commenter noted ''while it is stated clearly in the opening paragraph of the regulatory text (§ 600.355(b)(1)) that this standard [is] not meant to 'give preference to one method of managing a fishery over another,' the suggested mitigation management measures are replete with inappropriate implicit endorsement of ITQs (individual transferrable quotas) that directly undermine that provision.'' These references include ''limiting the number of participants in the fishery,'' ''spreading effort over time and area,'' and ''implementing management measures that reduce the race for fish.''

Response: The mitigation measures do not necessarily endorse ITQs. While ITQs may be one way to solve some problems with safety of life at sea and reduce the ''race for fish,'' they are not the only way. Vessel/license limitation systems have been and are being adopted without ITQs, such as in the Alaska crab and groundfish fisheries. In New England, the use of ''days at sea'' has spread effort over time and area without creating a ''race for fish.'' The term ''race for fish'' was used in the discussion of the bill that became the SFA, to describe the intensive fisheries that have developed at the expense of safety. As a primary reason for the establishment of this national standard, NMFS believes the term captures the intent of Congress and the legislation.

Comment 3: One commenter recommended that the national standard 10 guidelines require that Councils establish mandatory, standardized, accurate, and complete injury reporting requirements.

Response: NMFS agrees in part. Domestic fishing vessels are already required to report this information to the U.S. Coast Guard (USCG) under provisions at 46 CFR parts 4 and 28. This information can be made available through the USCG, and reports compared against vessels participating in the fisheries. Guidance on contents of SAFE reports at § 600.315(e)(1)(ii) has been revised to include consideration of safety issues.

Comment 4: One commenter recommended that the statement ''This standard is not meant to give preference to one method of managing a fishery over another,'' should be deleted or replaced by, ''While this standard is not meant to give preference to one method of managing a fishery over another, it should be considered a significant factor in allocation and other management decisions and the Council should provide rational justification why the safest method is not being used.'' Common sense would dictate that the safer management regime be used.

Response: NMFS disagrees and believes the guidance, as proposed, is accurate.

Comment 5: One commenter recommended that the term ''safety of human life at sea'' should be modified to read ''safety of human life and limb at sea'' to emphasis reduction in injuries as well as loss of life.

Response: NMFS considers the term ''safety of human life at sea'' to include not only safety of life, but safety of limb and the general operating environment, as well, to the extent that fishery

management measures may affect that safety. The discussion of the term at § 600.355(b)(3) has been revised to reflect this point.

Comment 6: One commenter recommended that this standard require that an FMP specify qualifications for individuals who are responsible for maintaining and controlling the stability of a fishing or fish processing vessel.

Response: Such a requirement is outside the scope of this rulemaking. Other than requiring employment and income information, neither NMFS nor the Councils have specified individual qualifications for fishermen. Individual professional qualifications for the master and crew come under the authority of the USCG, as specified by the Commercial Fishing Industry Vessel Safety Act. NMFS does have the authority to require permits of fishing vessel operators under the Magnuson-Stevens Act, section 303(b)(1)(B).

Comment 7: One commenter recommended that this standard consider more than the stability of the vessel and include safety of machinery and processing equipment, as well. FMPs should require processing vessels to meet and maintain safety standards developed in consultation with the Department of Labor's Occupational Safety and Health Administration (OSHA) as a condition of participation in the fishery.

Response: Onboard safety concerns, to the extent they are caused by fishery management measures, are addressed by the guidelines at § 600.355(c)(2). As noted in the comment, the USCG and OSHA have the primary responsibility for machinery and processing safety on board fishing vessels. Vessels are already required to comply with those standards; additional FMP requirements would therefore be redundant.

Comment 8: One commenter stated that § 600.355(c)(3) does not direct the creation of a mechanism for fisheries to be closed due to adverse weather conditions.

Response: While a mechanism to close, delay the opening of, or otherwise halt the fishery during adverse weather can improve safety, NMFS does not consider such a mechanism mandatory. Rather, it is one mitigation measure available to the Council, as noted in § 600.355(e)(1).

Comment 9: One commenter recommended that OSHA, the National Institute of Occupational Safety and Health, and the National Transportation Safety Board be consulted for vessel safety, in addition to the USCG.

Response: NMFS does not believe that requiring consultations with all these agencies is necessary at this time. These agencies are outstanding sources of information on specific issues, and consultation with one or more of them may be appropriate in certain circumstances. However, routine consultation with these agencies is not necessary and would become burdensome to the Councils and to the agencies involved. NMFS encourages the Councils to use these and other groups, including industry groups, in formulating safer management measures.

Comment 10: One commenter recommended that a risk analysis be conducted for future amendments that include allocations between gear types, inshore-offshore processing allocations, seasonal openings, area openings or closures, and possibly others.

Response: NMFS does not believe that requiring a specific safety risk analysis for all these actions is necessary at this time. While a risk analysis may be appropriate in situations where there are a number of alternatives whose effects on safety are not clear, in others, the alternatives may be constrained by other national standard or legal restrictions, or their effects are very clear and a risk analysis is unnecessary. NMFS prefers to allow each Council to conduct a risk analysis at its option, based on consultations with the USCG and the fishing industry.

Classification

OMB has determined this rule to be economically significant under E.O. 12866 because this rule provides guidance on implementing statutory changes that may have large economic impacts on specific sectors of the economy. Each amendment to an existing FMP and all new FMPs will include detailed analyses of the benefits and costs of the management programs under consideration to ensure compliance with E.O. 12866.

In addition, OMB has determined this rule to be ''major'' under the Small Business Regulatory Enforcement and Fairness Act Congressional Review provision (5 U.S.C. 801 *et seq*.). Pursuant to authority at 5 U.S.C. 808(1), this major rule conducting a regulatory program for commercial and recreational activities related to fishing will be effective June 1, 1998.

The main purpose of these guidelines, in carrying out the 1996 amendments to the Magnuson-Stevens Act, is to reduce overfishing immediately, rebuild overfished stocks within a set timeframe, and prevent by catch and reduce mortality of unavoidable bycatch to the maximum extent possible. The effects of these guidelines can only be described qualitatively; quantified and monetized estimates of benefits, costs and other effects cannot be developed until specific regulatory actions are indentified and proposed. Changes in employment, regional economic development, and a variety of distributional concerns are examples of the important effects not otherwise captured in estimates of social costs and benefits.

Producers will bear costs implementing programs and regulations developed under these guidelines to restore fisheries stocks. These costs will take a variety of forms, such as mandatory investments in new fishing gear to reduce bycatch; restrictions on the level of fishing effort, which raise average costs; and other measures intended to reduce the quantity of fish harvested. Consumers also will bear costs, primarily in the form of lost consumers' surplus resulting from reduced market supply and concomitant higher prices. These costs will rise to the extent that consumer tastes continue to evolve toward greater preference for fish and shellfish over other foods.

Once fisheries stocks have recovered, producers will gain benefits in the form of reduced costs of production. Consumers also will benefit to the extent that restored stocks permit increases in the allowable harvest compatible with sustainable yield. Summed over all fisheries in the exclusive economic zone over the long term, the potential increase in net revenues is estimated at $2.9 billion annually. Social benefits will equal the fraction of this amount remaining after all costs are deducted.

In the short-run, fisheries employment will likely fall as producers adapt to rules and restrictions undertaken to restore long-term sustainability. These job losses will be at least partially offset by increases in employment elsewhere. Once fisheries stocks have recovered, however, fisheries employment could increase by up to 300,000 jobs over present employment levels. As in the case of short-term job losses, these employment gains will be at least partially offset by reductions in jobs elsewhere. Changes in employment do not translate directly into benefits or costs, however, and must be evaluated instead as a separate class of effects resulting from individual rules and regulations promulgated pursuant to this guidance.

The Assistant General Counsel for Legislation and Regulation of the Department of Commerce certified to the Chief Counsel for Advocacy of the Small Business Administration that this rule will not have a significant economic impact on a substantial

number of small entities. This rule adds to and updates the national standards and accompanying explanatory and interpretive language to implement statutory provisions of the SFA. The SFA's amendments to the national standards make it necessary for the Councils to examine their existing FMPs and all future proposed management measures to ensure that they comply with the national standards; FMPs found out of compliance will need to be amended. These guidelines are intended to provide direction and elaboration on compliance with the national standards and, in themselves, do not have the force of law. Should Councils propose regulations as a result of the SFA, those actions may affect small entities and could be subject to the requirement to prepare a Regulatory Flexibility Analysis at the time they are proposed. Any future effects on small entities that may ultimately result from amendments to FMPs to bring them into compliance with the Magnuson-Stevens Act would be speculative at this time. One comment was received regarding this determination; the commenter believed that the impacts of these guidelines would have a significant economic impact on a substantial number of small entities. However, as explained in the response to general comment 8 above, NMFS believes that, while significant impacts could result from future management actions, the guidelines themselves have no such effect. Furthermore, NMFS has no basis upon which to assess, at this time, the impacts of regulations that may result from these revisions to the guidelines, except in the broadest sense. As a result, a Regulatory Flexibility Analysis for this rule was not prepared.

List of Subjects in 50 CFR Part 600

Administrative practice and procedure, Confidential business information, Fisheries, Fishing, Fishing vessels, Foreign relations, Intergovernmental relations, National Oceanic and Atmospheric Administration, Penalties, Reporting and recordkeeping requirements, Statistics.

Rolland A. Schmitten

Assistant Administrator for Fisheries, National Marine Fisheries Service.

For the reasons set out in the preamble, 50 CFR part 600 is amended as follows:

PART 600—MAGNUSON-STEVENS ACT PROVISIONS

1. The authority citation for part 600 continues to read as follows:

Authority: 5 U.S.C. 561 and 16 U.S.C. 1801 *et seq.*

2. The part heading is revised to read as set forth above.

3. In § 600.305, paragraph (c)(13) is removed and the second and third sentences of paragraph (a)(2), the last sentence of paragraph (a)(3), and paragraphs (c)(1), (c)(3), (c)(11), and (c)(12) are revised to read as follows:

§ 600.305 General.

(a) * * *

(2) * * * The Secretary will determine whether the proposed management objectives and measures are consistent with the national standards, other provisions of the Magnuson-Stevens Act, and other applicable law. The Secretary has an obligation under section 301(b) of the Magnuson-Stevens Act to inform the Councils of the Secretary's interpretation of the national standards so that they will have an understanding of the basis on which FMPs will be reviewed.

(3) * * * FMPs that are in substantial compliance with the guidelines, the Magnuson-Stevens Act, and other applicable law must be approved.

* * * * *

(c) * * *

(1) *Must* is used, instead of ''shall'', to denote an obligation to act; it is used primarily when referring to requirements of the Magnuson-Stevens Act, the logical extension thereof, or of other applicable law.

* * * * *

(3) *Should* is used to indicate that an action or consideration is strongly recommended to fulfill the Secretary's interpretation of the Magnuson-Stevens Act, and is a factor reviewers will look for in evaluating a SOPP or FMP.

* * * * *

(11) *Council* includes the Secretary, as applicable, when preparing FMPs or amendments under section 304(c) and (g) of the Magnuson-Stevens Act.

(12) *Stock or stock complex* is used as a synonym for ''fishery'' in the sense of the Magnuson-Stevens Act's first definition of the term; that is, as ''one or more stocks of fish that can be treated as a unit for purposes of conservation and management and that are identified on the basis of geographic, scientific, technical, recreational, or economic characteristics,'' as distinguished from the Magnuson-Stevens Act's second definition of fishery as ''any fishing for such stocks.''

4. Section 600.310 is revised to read as follows:

§ 600.310 National Standard 1—Optimum Yield.

(a) *Standard 1.* Conservation and management measures shall prevent overfishing while achieving, on a continuing basis, the OY from each fishery for the U.S. fishing industry.

(b) *General.* The determination of OY is a decisional mechanism for resolving the Magnuson-Stevens Act's multiple purposes and policies, implementing an FMP's objectives, and balancing the various interests that comprise the national welfare. OY is based on MSY, or on MSY as it may be reduced under paragraph (f)(3) of this section. The most important limitation on the specification of OY is that the choice of OY and the conservation and management measures proposed to achieve it must prevent overfishing.

(c) *MSY.* Each FMP should include an estimate of MSY as explained in this section.

(1) *Definitions.* (i) ''MSY'' is the largest long-term average catch or yield that can be taken from a stock or stock complex under prevailing ecological and environmental conditions.

(ii) ''MSY control rule'' means a harvest strategy which, if implemented, would be expected to result in a long-term average catch approximating MSY.

(iii) ''MSY stock size'' means the long-term average size of the stock or stock complex, measured in terms of spawning biomass or other appropriate units, that would be achieved under an MSY control rule in which the fishing mortality rate is constant.

(2) *Options in specifying MSY.* (i) Because MSY is a theoretical concept, its estimation in practice is conditional on the choice of an MSY control rule. In choosing an MSY control rule, Councils should be guided by the characteristics of the fishery, the FMP's objectives, and the best scientific information available. The simplest MSY control rule is to remove a constant catch in each year that the estimated stock size exceeds an appropriate lower bound, where this catch is chosen so as to maximize the resulting long-term average yield. Other examples include the following: Remove a constant fraction of the biomass in each year, where this fraction is chosen so as to maximize the resulting long-term average yield; allow a constant level of escapement in each year, where this level is chosen so as to maximize the resulting long-term average yield; vary the fishing mortality rate as a continuous function of stock size, where the parameters of this function are constant and chosen so as to maximize the resulting long-term average yield. In any MSY control rule,

a given stock size is associated with a given level of fishing mortality and a given level of potential harvest, where the long-term average of these potential harvests provides an estimate of MSY.

(ii) Any MSY values used in determining OY will necessarily be estimates, and these will typically be associated with some level of uncertainty. Such estimates must be based on the best scientific information available (see § 600.315) and must incorporate appropriate consideration of risk (see § 600.335). Beyond these requirements, however, Councils have a reasonable degree of latitude in determining which estimates to use and how these estimates are to be expressed. For example, a point estimate of MSY may be expressed by itself or together with a confidence interval around that estimate.

(iii) In the case of a mixed-stock fishery, MSY should be specified on a stock-by-stock basis. However, where MSY cannot be specified for each stock, then MSY may be specified on the basis of one or more species as an indicator for the mixed stock as a whole or for the fishery as a whole.

(iv) Because MSY is a long-term average, it need not be estimated annually, but it must be based on the best scientific information available, and should be re-estimated as required by changes in environmental or ecological conditions or new scientific information.

(3) *Alternatives to specifying MSY*. When data are insufficient to estimate MSY directly, Councils should adopt other measures of productive capacity that can serve as reasonable proxies for MSY, to the extent possible. Examples include various reference points defined in terms of relative spawning per recruit. For instance, the fishing mortality rate that reduces the long-term average level of spawning per recruit to 30–40 percent of the long-term average that would be expected in the absence of fishing may be a reasonable proxy for the MSY fishing mortality rate. The long-term average stock size obtained by fishing year after year at this rate under average recruitment may be a reasonable proxy for the MSY stock size, and the long-term average catch so obtained may be a reasonable proxy for MSY. The natural mortality rate may also be a reasonable proxy for the MSY fishing mortality rate. If a reliable estimate of pristine stock size (i.e., the long-term average stock size that would be expected in the absence of fishing) is available, a stock size approximately 40 percent of this value may be a reasonable proxy for the MSY stock size, and the product of this stock size and the natural mortality rate may be a reasonable proxy for MSY.

(d) *Overfishing*—(1) *Definitions*. (i) ''To overfish'' means to fish at a rate or level that jeopardizes the capacity of a stock or stock complex to produce MSY on a continuing basis.

(ii) ''Overfishing'' occurs whenever a stock or stock complex is subjected to a rate or level of fishing mortality that jeopardizes the capacity of a stock or stock complex to produce MSY on a continuing basis.

(iii) In the Magnuson-Stevens Act, the term ''overfished'' is used in two senses: First, to describe any stock or stock complex that is subjected to a rate or level of fishing mortality meeting the criterion in paragraph (d)(1)(i) of this section, and second, to describe any stock or stock complex whose size is sufficiently small that a change in management practices is required in order to achieve an appropriate level and rate of rebuilding. To avoid confusion, this section uses ''overfished'' in the second sense only.

(2) *Specification of status determination criteria*. Each FMP must specify, to the extent possible, objective and measurable status determination criteria for each stock or stock complex covered by that FMP and provide an analysis of how the status determination criteria were chosen and how they relate to reproductive potential. Status determination criteria must be expressed in a way that enables the Council and the Secretary to monitor the stock or stock complex and determine annually whether overfishing is occurring and whether the stock or stock complex is overfished. In all cases, status determination criteria must specify both of the following:

(i) *A maximum fishing mortality threshold or reasonable proxy thereof*. The fishing mortality threshold may be expressed either as a single number or as a function of spawning biomass or other measure of productive capacity. The fishing mortality threshold must not exceed the fishing mortality rate or level associated with the relevant MSY control rule. Exceeding the fishing mortality threshold for a period of 1 year or more constitutes overfishing.

(ii) *A minimum stock size threshold or reasonable proxy thereof*. The stock size threshold should be expressed in terms of spawning biomass or other measure of productive capacity. To the extent possible, the stock size threshold should equal whichever of the following is greater: One-half the MSY stock size, or the minimum stock size at which rebuilding to the MSY level would be expected to occur within 10 years if the stock or stock complex were exploited at the maximum fishing mortality threshold specified under paragraph (d)(2)(i) of this section. Should the actual size of the stock or stock complex in a given year fall below this threshold, the stock or stock complex is considered overfished.

(3) *Relationship of status determination criteria to other national standards*—(i) *National standard 2*. Status determination criteria must be based on the best scientific information available (see § 600.315). When data are insufficient to estimate MSY, Councils should base status determination criteria on reasonable proxies thereof to the extent possible (also see paragraph (c)(3) of this section). In cases where scientific data are severely limited, effort should also be directed to identifying and gathering the needed data.

(ii) *National standard 3*. The requirement to manage interrelated stocks of fish as a unit or in close coordination notwithstanding (see § 600.320), status determination criteria should generally be specified in terms of the level of stock aggregation for which the best scientific information is available (also see paragraph (c)(2)(iii) of this section).

(iii) *National standard 6*. Councils must build into the status determination criteria appropriate consideration of risk, taking into account uncertainties in estimating harvest, stock conditions, life history parameters, or the effects of environmental factors (see § 600.335).

(4) *Relationship of status determination criteria to environmental change*. Some short-term environmental changes can alter the current size of a stock or stock complex without affecting the long-term productive capacity of the stock or stock complex. Other environmental changes affect both the current size of the stock or stock complex and the long-term productive capacity of the stock or stock complex.

(i) If environmental changes cause a stock or stock complex to fall below the minimum stock size threshold without affecting the long-term productive capacity of the stock or stock complex, fishing mortality must be constrained sufficiently to allow rebuilding within an acceptable time frame (also see paragraph (e)(4)(ii) of this section). Status determination criteria need not be respecified.

(ii) If environmental changes affect the long-term productive capacity of the stock or stock complex, one or more components of the status determination criteria must be respecified. Once status determination criteria have been respecified, fishing mortality may or may not have to be reduced, depending

on the status of the stock or stock complex with respect to the new criteria.

(iii) If manmade environmental changes are partially responsible for a stock or stock complex being in an overfished condition, in addition to controlling effort, Councils should recommend restoration of habitat and other ameliorative programs, to the extent possible (see also the guidelines issued pursuant to section 305(b) of the Magnuson-Stevens Act for Council actions concerning essential fish habitat).

(5) *Secretarial approval of status determination criteria.* Secretarial approval or disapproval of proposed status determination criteria will be based on consideration of whether the proposal:

(i) Has sufficient scientific merit.

(ii) Contains the elements described in paragraph (d)(2) of this section.

(iii) Provides a basis for objective measurement of the status of the stock or stock complex against the criteria.

(iv) Is operationally feasible.

(6) *Exceptions.* There are certain limited exceptions to the requirement to prevent overfishing. Harvesting one species of a mixed-stock complex at its optimum level may result in the overfishing of another stock component in the complex. A Council may decide to permit this type of overfishing only if all of the following conditions are satisfied:

(i) It is demonstrated by analysis (paragraph (f)(6) of this section) that such action will result in long-term net benefits to the Nation.

(ii) It is demonstrated by analysis that mitigating measures have been considered and that a similar level of long-term net benefits cannot be achieved by modifying fleet behavior, gear selection/configuration, or other technical characteristic in a manner such that no overfishing would occur.

(iii) The resulting rate or level of fishing mortality will not cause any species or evolutionarily significant unit thereof to require protection under the ESA.

(e) *Ending overfishing and rebuilding overfished stocks*— (1) *Definition.* A threshold, either maximum fishing mortality or minimum stock size, is being ''approached'' whenever it is projected that the threshold will be breached within 2 years, based on trends in fishing effort, fishery resource size, and other appropriate factors.

(2) *Notification.* The Secretary will immediately notify a Council and request that remedial action be taken whenever the Secretary determines that:

(i) Overfishing is occurring;

(ii) A stock or stock complex is overfished;

(iii) The rate or level of fishing mortality for a stock or stock complex is approaching the maximum fishing mortality threshold;

(iv) A stock or stock complex is approaching its minimum stock size threshold; or

(v) Existing remedial action taken for the purpose of ending previously identified overfishing or rebuilding a previously identified overfished stock or stock complex has not resulted in adequate progress.

(3) *Council action.* Within 1 year of such time as the Secretary may identify that overfishing is occurring, that a stock or stock complex is overfished, or that a threshold is being approached, or such time as a Council may be notified of the same under paragraph (e)(2) of this section, the Council must take remedial action by preparing an FMP, FMP amendment, or proposed regulations. This remedial action must be designed to accomplish all of the following purposes that apply:

(i) If overfishing is occurring, the purpose of the action is to end overfishing.

(ii) If the stock or stock complex is overfished, the purpose of the action is to rebuild the stock or stock complex to the MSY level within an appropriate time frame.

(iii) If the rate or level of fishing mortality is approaching the maximum fishing mortality threshold (from below), the purpose of the action is to prevent this threshold from being reached.

(iv) If the stock or stock complex is approaching the minimum stock size threshold (from above), the purpose of the action is to prevent this threshold from being reached.

(4) *Constraints on Council action.* (i) In cases where overfishing is occurring, Council action must be sufficient to end overfishing.

(ii) In cases where a stock or stock complex is overfished, Council action must specify a time period for rebuilding the stock or stock complex that satisfies the requirements of section 304(e)(4)(A) of the Magnuson-Stevens Act.

(A) A number of factors enter into the specification of the time period for rebuilding:

(*1*) The status and biology of the stock or stock complex;

(*2*) Interactions between the stock or stock complex and other components of the marine ecosystem (also referred to as ''other environmental conditions'');

(*3*) The needs of fishing communities;

(*4*) Recommendations by international organizations in which the United States participates; and

(*5*) Management measures under an international agreement in which the United States participates.

(B) These factors enter into the specification of the time period for rebuilding as follows:

(*1*) The lower limit of the specified time period for rebuilding is determined by the status and biology of the stock or stock complex and its interactions with other components of the marine ecosystem, and is defined as the amount of time that would be required for rebuilding if fishing mortality were eliminated entirely.

(*2*) If the lower limit is less than 10 years, then the specified time period for rebuilding may be adjusted upward to the extent warranted by the needs of fishing communities and recommendations by international organizations in which the United States participates, except that no such upward adjustment can result in the specified time period exceeding 10 years, unless management measures under an international agreement in which the United States participates dictate otherwise.

(*3*) If the lower limit is 10 years or greater, then the specified time period for rebuilding may be adjusted upward to the extent warranted by the needs of fishing communities and recommendations by international organizations in which the United States participates, except that no such upward adjustment can exceed the rebuilding period calculated in the absence of fishing mortality, plus one mean generation time or equivalent period based on the species' life-history characteristics. For example, suppose a stock could be rebuilt within 12 years in the absence of any fishing mortality, and has a mean generation time of 8 years. The rebuilding period, in this case, could be as long as 20 years.

(C) A rebuilding program undertaken after May 1, 1998 commences as soon as the first measures to rebuild the stock or stock complex are implemented.

(D) In the case of rebuilding plans that were already in place as of May 1, 1998, such rebuilding plans must be reviewed to determine whether they are in compliance with all requirements of the Magnuson-Stevens Act, as amended by the Sustainable Fisheries Act.

(iii) For fisheries managed under an international agreement, Council action must reflect traditional participation in the fishery, relative to other nations, by fishermen of the United States.

(5) *Interim measures.* The Secretary, on his/her own initiative or in response

to a Council request, may implement interim measures to reduce overfishing under section 305(c) of the Magnuson-Stevens Act, until such measures can be replaced by an FMP, FMP amendment, or regulations taking remedial action.

(i) These measures may remain in effect for no more than 180 days, but may be extended for an additional 180 days if the public has had an opportunity to comment on the measures and, in the case of Council-recommended measures, the Council is actively preparing an FMP, FMP amendment, or proposed regulations to address overfishing on a permanent basis. Such measures, if otherwise in compliance with the provisions of the Magnuson-Stevens Act, may be implemented even though they are not sufficient by themselves to stop overfishing of a fishery.

(ii) If interim measures are made effective without prior notice and opportunity for comment, they should be reserved for exceptional situations, because they affect fishermen without providing the usual procedural safeguards. A Council recommendation for interim measures without notice-and-comment rulemaking will be considered favorably if the short-term benefits of the measures in reducing overfishing outweigh the value of advance notice, public comment, and deliberative consideration of the impacts on participants in the fishery.

(f) *OY*—(1) *Definitions*. (i) The term ''optimum,'' with respect to the yield from a fishery, means the amount of fish that will provide the greatest overall benefit to the Nation, particularly with respect to food production and recreational opportunities and taking into account the protection of marine ecosystems; that is prescribed on the basis of the MSY from the fishery, as reduced by any relevant economic, social, or ecological factor; and, in the case of an overfished fishery, that provides for rebuilding to a level consistent with producing the MSY in such fishery.

(ii) In national standard 1, use of the phrase ''achieving, on a continuing basis, the OY from each fishery'' means producing, from each fishery, a long-term series of catches such that the average catch is equal to the average OY and such that status determination criteria are met.

(2) *Values in determination*. In determining the greatest benefit to the Nation, these values that should be weighed are food production, recreational opportunities, and protection afforded to marine ecosystems. They should receive serious attention when considering the economic, social, or ecological factors used in reducing MSY to obtain OY.

(i) The benefits of food production are derived from providing seafood to consumers, maintaining an economically viable fishery together with its attendant contributions to the national, regional, and local economies, and utilizing the capacity of the Nation's fishery resources to meet nutritional needs.

(ii) The benefits of recreational opportunities reflect the quality of both the recreational fishing experience and non-consumptive fishery uses such as ecotourism, fish watching, and recreational diving, and the contribution of recreational fishing to the national, regional, and local economies and food supplies.

(iii) The benefits of protection afforded to marine ecosystems are those resulting from maintaining viable populations (including those of unexploited species), maintaining evolutionary and ecological processes (e.g., disturbance regimes, hydrological processes, nutrient cycles), maintaining the evolutionary potential of species and ecosystems, and accommodating human use.

(3) *Factors relevant to OY*. Because fisheries have finite capacities, any attempt to maximize the measures of benefit described in paragraph (f)(2) of this section will inevitably encounter practical constraints. One of these is MSY. Moreover, various factors can constrain the optimum level of catch to a value less than MSY. The Magnuson-Stevens Act's definition of OY identifies three categories of such factors: Social, economic, and ecological. Not every factor will be relevant in every fishery. For some fisheries, insufficient information may be available with respect to some factors to provide a basis for corresponding reductions in MSY.

(i) *Social factors*. Examples are enjoyment gained from recreational fishing, avoidance of gear conflicts and resulting disputes, preservation of a way of life for fishermen and their families, and dependence of local communities on a fishery. Other factors that may be considered include the cultural place of subsistence fishing, obligations under Indian treaties, and worldwide nutritional needs.

(ii) *Economic factors*. Examples are prudent consideration of the risk of overharvesting when a stock's size or productive capacity is uncertain, satisfaction of consumer and recreational needs, and encouragement of domestic and export markets for U.S.-harvested fish. Other factors that may be considered include the value of fisheries, the level of capitalization, the decrease in cost per unit of catch afforded by an increase in stock size, and the attendant increase in catch per unit of effort, alternate employment opportunities, and economies of coastal areas.

(iii) *Ecological factors*. Examples are stock size and age composition, the vulnerability of incidental or unregulated stocks in a mixed-stock fishery, predator-prey or competitive interactions, and dependence of marine mammals and birds or endangered species on a stock of fish. Also important are ecological or environmental conditions that stress marine organisms, such as natural and manmade changes in wetlands or nursery grounds, and effects of pollutants on habitat and stocks.

(4) *Specification*. (i) The amount of fish that constitutes the OY should be expressed in terms of numbers or weight of fish. However, OY may be expressed as a formula that converts periodic stock assessments into target harvest levels; in terms of an annual harvest of fish or shellfish having a minimum weight, length, or other measurement; or as an amount of fish taken only in certain areas, in certain seasons, with particular gear, or by a specified amount of fishing effort.

(ii) Either a range or a single value may be specified for OY. Specification of a numerical, fixed-value OY does not preclude use of annual target harvest levels that vary with stock size. Such target harvest levels may be prescribed on the basis of an OY control rule similar to the MSY control rule described in paragraph (c)(1)(ii) of this section, but designed to achieve OY on average, rather than MSY. The annual harvest level obtained under an OY control rule must always be less than or equal to the harvest level that would be obtained under the MSY control rule.

(iii) All fishing mortality must be counted against OY, including that resulting from bycatch, scientific research, and any other fishing activities.

(iv) The OY specification should be translatable into an annual numerical estimate for the purposes of establishing any TALFF and analyzing impacts of the management regime. There should be a mechanism in the FMP for periodic reassessment of the OY specification, so that it is responsive to changing circumstances in the fishery.

(v) The determination of OY requires a specification of MSY, which may not always be possible or meaningful. However, even where sufficient scientific data as to the biological characteristics of the stock do not exist,

or where the period of exploitation or investigation has not been long enough for adequate understanding of stock dynamics, or where frequent large-scale fluctuations in stock size diminish the meaningfulness of the MSY concept, the OY must still be based on the best scientific information available. When data are insufficient to estimate MSY directly, Councils should adopt other measures of productive capacity that can serve as reasonable proxies for MSY to the extent possible (also see paragraph (c)(3) of this section).

(vi) In a mixed-stock fishery, specification of a fishery-wide OY may be accompanied by management measures establishing separate annual target harvest levels for the individual stocks. In such cases, the sum of the individual target levels should not exceed OY.

(5) *OY and the precautionary approach*. In general, Councils should adopt a precautionary approach to specification of OY. A precautionary approach is characterized by three features:

(i) Target reference points, such as OY, should be set safely below limit reference points, such as the catch level associated with the fishing mortality rate or level defined by the status determination criteria. Because it is a target reference point, OY does not constitute an absolute ceiling, but rather a desired result. An FMP must contain conservation and management measures to achieve OY, and provisions for information collection that are designed to determine the degree to which OY is achieved on a continuing basis—that is, to result in a long-term average catch equal to the long-term average OY, while meeting the status determination criteria. These measures should allow for practical and effective implementation and enforcement of the management regime, so that the harvest is allowed to reach OY, but not to exceed OY by a substantial amount. The Secretary has an obligation to implement and enforce the FMP so that OY is achieved. If management measures prove unenforceable—or too restrictive, or not rigorous enough to realize OY—they should be modified; an alternative is to reexamine the adequacy of the OY specification. Exceeding OY does not necessarily constitute overfishing. However, even if no overfishing resulted from exceeding OY, continual harvest at a level above OY would violate national standard 1, because OY was not achieved on a continuing basis.

(ii) A stock or stock complex that is below the size that would produce MSY should be harvested at a lower rate or level of fishing mortality than if the stock or stock complex were above the size that would produce MSY.

(iii) Criteria used to set target catch levels should be explicitly risk averse, so that greater uncertainty regarding the status or productive capacity of a stock or stock complex corresponds to greater caution in setting target catch levels. Part of the OY may be held as a reserve to allow for factors such as uncertainties in estimates of stock size and DAH. If an OY reserve is established, an adequate mechanism should be included in the FMP to permit timely release of the reserve to domestic or foreign fishermen, if necessary.

(6) *Analysis*. An FMP must contain an assessment of how its OY specification was determined (section 303(a)(3) of the Magnuson-Stevens Act). It should relate the explanation of overfishing in paragraph (d) of this section to conditions in the particular fishery and explain how its choice of OY and conservation and management measures will prevent overfishing in that fishery. A Council must identify those economic, social, and ecological factors relevant to management of a particular fishery, then evaluate them to determine the amount, if any, by which MSY exceeds OY. The choice of a particular OY must be carefully defined and documented to show that the OY selected will produce the greatest benefit to the Nation. If overfishing is permitted under paragraph (d)(6) of this section, the assessment must contain a justification in terms of overall benefits, including a comparison of benefits under alternative management measures, and an analysis of the risk of any species or ecologically significant unit thereof reaching a threatened or endangered status, as well as the risk of any stock or stock complex falling below its minimum stock size threshold.

(7) *OY and foreign fishing*. Section 201(d) of the Magnuson-Stevens Act provides that fishing by foreign nations is limited to that portion of the OY that will not be harvested by vessels of the United States.

(i) *DAH*. Councils must consider the capacity of, and the extent to which, U.S. vessels will harvest the OY on an annual basis. Estimating the amount that U.S. fishing vessels will actually harvest is required to determine the surplus.

(ii) *DAP*. Each FMP must assess the capacity of U.S. processors. It must also assess the amount of DAP, which is the sum of two estimates: The estimated amount of U.S. harvest that domestic processors will process, which may be based on historical performance or on surveys of the expressed intention of manufacturers to process, supported by evidence of contracts, plant expansion, or other relevant information; and the estimated amount of fish that will be harvested by domestic vessels, but not processed (e.g., marketed as fresh whole fish, used for private consumption, or used for bait).

(iii) *JVP*. When DAH exceeds DAP, the surplus is available for JVP. JVP is derived from DAH.

5. In § 600.315, paragraphs (e)(3) and (e)(4) are redesignated as paragraphs (e)(4) and (e)(5), respectively; new paragraph (e)(3) is added; and paragraphs (c)(2), (c)(3), (e)(1) introductory text, (e)(1)(ii), and newly redesignated (e)(4) are revised to read as follows:

§ 600.315 National Standard 2—Scientific Information.

* * * * *

(c) * * *

(2) An FMP should identify scientific information needed from other sources to improve understanding and management of the resource, marine ecosystem, and the fishery (including fishing communities).

(3) The information submitted by various data suppliers should be comparable and compatible, to the maximum extent possible.

* * * * *

(e) * * *

(1) The SAFE report is a document or set of documents that provides Councils with a summary of information concerning the most recent biological condition of stocks and the marine ecosystems in the FMU and the social and economic condition of the recreational and commercial fishing interests, fishing communities, and the fish processing industries. It summarizes, on a periodic basis, the best available scientific information concerning the past, present, and possible future condition of the stocks, marine ecosystems, and fisheries being managed under Federal regulation.

* * * * *

(ii) The SAFE report provides information to the Councils for determining annual harvest levels from each stock, documenting significant trends or changes in the resource, marine ecosystems, and fishery over time, and assessing the relative success of existing state and Federal fishery management programs. Information on bycatch and safety for each fishery should also be summarized. In addition, the SAFE report may be used to update or expand previous environmental and regulatory impact documents, and ecosystem and habitat descriptions.

* * * * *

(3) Each SAFE report should contain a description of the maximum fishing mortality threshold and the minimum stock size threshold for each stock or stock complex, along with information by which the Council may determine:

(i) Whether overfishing is occurring with respect to any stock or stock complex, whether any stock or stock complex is overfished, whether the rate or level of fishing mortality applied to any stock or stock complex is approaching the maximum fishing mortality threshold, and whether the size of any stock or stock complex is approaching the minimum stock size threshold.

(ii) Any management measures necessary to provide for rebuilding an overfished stock or stock complex (if any) to a level consistent with producing the MSY in such fishery.

(4) Each SAFE report may contain additional economic, social, community, essential fish habitat, and ecological information pertinent to the success of management or the achievement of objectives of each FMP.

* * * * *

6. In § 600.320, the last sentence of paragraph (c) is revised to read as follows:

§ 600.320 National Standard 3—Management Units.

* * * * *

(c) * * * The Secretary designates which Council(s) will prepare the FMP, under section 304(f) of the Magnuson-Stevens Act.

* * * * *

7. In § 600.325, paragraph (c)(3)(ii) is revised to read as follows:

§ 600.325 National Standard 4—Allocations.

* * * * *

(c) * * *

(3) * * *

(ii) *Promotion of conservation*. Numerous methods of allocating fishing privileges are considered ''conservation and management'' measures under section 303 of the Magnuson-Stevens Act. An allocation scheme may promote conservation by encouraging a rational, more easily managed use of the resource. Or, it may promote conservation (in the sense of wise use) by optimizing the yield in terms of size, value, market mix, price, or economic or social benefit of the product. To the extent that rebuilding plans or other conservation and management measures that reduce the overall harvest in a fishery are necessary, any harvest restrictions or recovery benefits must be allocated fairly and equitably among the commercial, recreational, and charter fishing sectors of the fishery.

* * * * *

8. In § 600.330, paragraphs (a) and (b)(1), the first sentence of paragraph (c) introductory text, the last sentence of paragraph (c)(1), and paragraph (c)(2) are revised to read as follows:

§ 600.330 National Standard 5—Efficiency.

(a) *Standard 5*. Conservation and management measures shall, where practicable, consider efficiency in the utilization of fishery resources; except that no such measure shall have economic allocation as its sole purpose.

(b) * * *

(1) *General*. The term ''utilization'' encompasses harvesting, processing, marketing, and non-consumptive uses of the resource, since management decisions affect all sectors of the industry. In considering efficient utilization of fishery resources, this standard highlights one way that a fishery can contribute to the Nation's benefit with the least cost to society: Given a set of objectives for the fishery, an FMP should contain management measures that result in as efficient a fishery as is practicable or desirable.

* * * * *

(c) *Limited access*. A ''system for limiting access,'' which is an optional measure under section 303(b) of the Magnuson-Stevens Act, is a type of allocation of fishing privileges that may be considered to contribute to economic efficiency or conservation. * * *

(1) * * * Two forms (i.e., Federal fees for licenses or permits in excess of administrative costs, and taxation) are not permitted under the Magnuson-Stevens Act, except for fees allowed under section 304(d)(2).

(2) *Factors to consider*. The Magnuson-Stevens Act ties the use of limited access to the achievement of OY. An FMP that proposes a limited access system must consider the factors listed in section 303(b)(6) of the Magnuson-Stevens Act and in § 600.325(c)(3). In addition, it should consider the criteria for qualifying for a permit, the nature of the interest created, whether to make the permit transferable, and the Magnuson-Stevens Act's limitations on returning economic rent to the public under section 304(d). The FMP should also discuss the costs of achieving an appropriate distribution of fishing privileges.

* * * * *

9. In § 600.340, paragraph (b)(1) is amended by revising the second sentence to read as follows:

§ 600.340 National Standard 7—Costs and Benefits.

* * * * *

(b) * * *

(1) * * * The Magnuson-Stevens Act requires Councils to prepare FMPs only for overfished fisheries and for other fisheries where regulation would serve some useful purpose and where the present or future benefits of regulation would justify the costs. * * *

* * * * *

10. Sections 600.345, 600.350, and 600.355 are added to subpart D to read as follows:

§ 600.345 National Standard 8—Communities.

(a) *Standard 8*. Conservation and management measures shall, consistent with the conservation requirements of the Magnuson-Stevens Act (including the prevention of overfishing and rebuilding of overfished stocks), take into account the importance of fishery resources to fishing communities in order to:

(1) Provide for the sustained participation of such communities; and

(2) To the extent practicable, minimize adverse economic impacts on such communities.

(b) *General*. (1) This standard requires that an FMP take into account the importance of fishery resources to fishing communities. This consideration, however, is within the context of the conservation requirements of the Magnuson-Stevens Act. Deliberations regarding the importance of fishery resources to affected fishing communities, therefore, must not compromise the achievement of conservation requirements and goals of the FMP. Where the preferred alternative negatively affects the sustained participation of fishing communities, the FMP should discuss the rationale for selecting this alternative over another with a lesser impact on fishing communities. All other things being equal, where two alternatives achieve similar conservation goals, the alternative that provides the greater potential for sustained participation of such communities and minimizes the adverse economic impacts on such communities would be the preferred alternative.

(2) This standard does not constitute a basis for allocating resources to a specific fishing community nor for providing preferential treatment based on residence in a fishing community.

(3) The term ''fishing community'' means a community that is substantially dependent on or substantially engaged in the harvest or processing of fishery resources to meet social and economic

needs, and includes fishing vessel owners, operators, and crew, and fish processors that are based in such communities. A fishing community is a social or economic group whose members reside in a specific location and share a common dependency on commercial, recreational, or subsistence fishing or on directly related fisheries-dependent services and industries (for example, boatyards, ice suppliers, tackle shops).

(4) The term ''sustained participation'' means continued access to the fishery within the constraints of the condition of the resource.

(c) *Analysis.* (1) FMPs must examine the social and economic importance of fisheries to communities potentially affected by management measures. For example, severe reductions of harvests for conservation purposes may decrease employment opportunities for fishermen and processing plant workers, thereby adversely affecting their families and communities. Similarly, a management measure that results in the allocation of fishery resources among competing sectors of a fishery may benefit some communities at the expense of others.

(2) An appropriate vehicle for the analyses under this standard is the fishery impact statement required by section 303(a)(9) of the Magnuson-Stevens Act. Qualitative and quantitative data may be used, including information provided by fishermen, dealers, processors, and fisheries organizations and associations. In cases where data are severely limited, effort should be directed to identifying and gathering needed data.

(3) To address the sustained participation of fishing communities that will be affected by management measures, the analysis should first identify affected fishing communities and then assess their differing levels of dependence on and engagement in the fishery being regulated. The analysis should also specify how that assessment was made. The best available data on the history, extent, and type of participation of these fishing communities in the fishery should be incorporated into the social and economic information presented in the FMP. The analysis does not have to contain an exhaustive listing of all communities that might fit the definition; a judgment can be made as to which are primarily affected. The analysis should discuss each alternative's likely effect on the sustained participation of these fishing communities in the fishery.

(4) The analysis should assess the likely positive and negative social and economic impacts of the alternative management measures, over both the short and the long term, on fishing communities. Any particular management measure may economically benefit some communities while adversely affecting others. Economic impacts should be considered both for individual communities and for the group of all affected communities identified in the FMP. Impacts of both consumptive and non-consumptive uses of fishery resources should be considered.

(5) A discussion of social and economic impacts should identify those alternatives that would minimize adverse impacts on these fishing communities within the constraints of conservation and management goals of the FMP, other national standards, and other applicable law.

§ 600.350 National Standard 9—Bycatch.

(a) *Standard 9.* Conservation and management measures shall, to the extent practicable:

(1) Minimize bycatch; and

(2) To the extent bycatch cannot be avoided, minimize the mortality of such bycatch.

(b) *General.* This national standard requires Councils to consider the bycatch effects of existing and planned conservation and management measures. Bycatch can, in two ways, impede efforts to protect marine ecosystems and achieve sustainable fisheries and the full benefits they can provide to the Nation. First, bycatch can increase substantially the uncertainty concerning total fishing-related mortality, which makes it more difficult to assess the status of stocks, to set the appropriate OY and define overfishing levels, and to ensure that OYs are attained and overfishing levels are not exceeded. Second, bycatch may also preclude other more productive uses of fishery resources.

(c) *Definition—Bycatch.* The term ''bycatch'' means fish that are harvested in a fishery, but that are not sold or kept for personal use. Bycatch includes the discard of whole fish at sea or elsewhere, including economic discards and regulatory discards, and fishing mortality due to an encounter with fishing gear that does not result in capture of fish (i.e., unobserved fishing mortality). Bycatch does not include any fish that legally are retained in a fishery and kept for personal, tribal, or cultural use, or that enter commerce through sale, barter, or trade. Bycatch does not include fish released alive under a recreational catch-and-release fishery management program. A catch-and-release fishery management program is one in which the retention of a particular species is prohibited. In such a program, those fish released alive would not be considered bycatch. Bycatch also does not include Atlantic highly migratory species harvested in a commercial fishery that are not regulatory discards and that are tagged and released alive under a scientific tag-and-release program established by the Secretary.

(d) *Minimizing bycatch and bycatch mortality.* The priority under this standard is first to avoid catching bycatch species where practicable. Fish that are bycatch and cannot be avoided must, to the extent practicable, be returned to the sea alive. Any proposed conservation and management measure that does not give priority to avoiding the capture of bycatch species must be supported by appropriate analyses. In their evaluation, the Councils must consider the net benefits to the Nation, which include, but are not limited to: Negative impacts on affected stocks; incomes accruing to participants in directed fisheries in both the short and long term; incomes accruing to participants in fisheries that target the bycatch species; environmental consequences; non-market values of bycatch species, which include non-consumptive uses of bycatch species and existence values, as well as recreational values; and impacts on other marine organisms. To evaluate conservation and management measures relative to this and other national standards, as well as to evaluate total fishing mortality, Councils must—

(1) *Promote development of a database on bycatch and bycatch mortality in the fishery to the extent practicable.* A review and, where necessary, improvement of data collection methods, data sources, and applications of data must be initiated for each fishery to determine the amount, type, disposition, and other characteristics of bycatch and bycatch mortality in each fishery for purposes of this standard and of section 303(a)(11) and (12) of the Magnuson-Stevens Act. Bycatch should be categorized to focus on management responses necessary to minimize bycatch and bycatch mortality to the extent practicable. When appropriate, management measures, such as at-sea monitoring programs, should be developed to meet these information needs.

(2) *For each management measure, assess the effects on the amount and type of bycatch and bycatch mortality in the fishery.* Most conservation and management measures can affect the amounts of bycatch or bycatch mortality in a fishery, as well as the extent to

which further reductions in bycatch are practicable. In analyzing measures, including the status quo, Councils should assess the impacts of minimizing bycatch and bycatch mortality, as well as consistency of the selected measure with other national standards and applicable laws. The benefits of minimizing bycatch to the extent practicable should be identified and an assessment of the impact of the selected measure on bycatch and bycatch mortality provided. Due to limitations on the information available, fishery managers may not be able to generate precise estimates of bycatch and bycatch mortality or other effects for each alternative. In the absence of quantitative estimates of the impacts of each alternative, Councils may use qualitative measures. Information on the amount and type of bycatch should be summarized in the SAFE reports.

(3) *Select measures that, to the extent practicable, will minimize bycatch and bycatch mortality*. (i) A determination of whether a conservation and management measure minimizes bycatch or bycatch mortality to the extent practicable, consistent with other national standards and maximization of net benefits to the Nation, should consider the following factors:

(A) Population effects for the bycatch species.

(B) Ecological effects due to changes in the bycatch of that species (effects on other species in the ecosystem).

(C) Changes in the bycatch of other species of fish and the resulting population and ecosystem effects.

(D) Effects on marine mammals and birds.

(E) Changes in fishing, processing, disposal, and marketing costs.

(F) Changes in fishing practices and behavior of fishermen.

(G) Changes in research, administration, and enforcement costs and management effectiveness.

(H) Changes in the economic, social, or cultural value of fishing activities and nonconsumptive uses of fishery resources.

(I) Changes in the distribution of benefits and costs.

(J) Social effects.

(ii) The Councils should adhere to the precautionary approach found in the Food and Agriculture Organization of the United Nations (FAO) Code of Conduct for Responsible Fisheries (Article 6.5), which is available from the Director, Publications Division, FAO, Viale delle Terme di Caracalla, 00100 Rome, Italy, when faced with uncertainty concerning any of the factors listed in this paragraph (d)(3).

(4) *Monitor selected management measures*. Effects of implemented measures should be evaluated routinely. Monitoring systems should be established prior to fishing under the selected management measures. Where applicable, plans should be developed and coordinated with industry and other concerned organizations to identify opportunities for cooperative data collection, coordination of data management for cost efficiency, and avoidance of duplicative effort.

(e) *Other considerations*. Other applicable laws, such as the MMPA, the ESA, and the Migratory Bird Treaty Act, require that Councils consider the impact of conservation and management measures on living marine resources other than fish; i.e., marine mammals and birds.

§ 600.355 National Standard 10—Safety of Life at Sea.

(a) *Standard 10*. Conservation and management measures shall, to the extent practicable, promote the safety of human life at sea.

(b) *General*. (1) Fishing is an inherently dangerous occupation where not all hazardous situations can be foreseen or avoided. The standard directs Councils to reduce that risk in crafting their management measures, so long as they can meet the other national standards and the legal and practical requirements of conservation and management. This standard is not meant to give preference to one method of managing a fishery over another.

(2) The qualifying phrase ''to the extent practicable'' recognizes that regulation necessarily puts constraints on fishing that would not otherwise exist. These constraints may create pressures on fishermen to fish under conditions that they would otherwise avoid. This standard instructs the Councils to identify and avoid those situations, if they can do so consistent with the legal and practical requirements of conservation and management of the resource.

(3) For the purposes of this national standard, the safety of the fishing vessel and the protection from injury of persons aboard the vessel are considered the same as ''safety of human life at sea. The safety of a vessel and the people aboard is ultimately the responsibility of the master of that vessel. Each master makes many decisions about vessel maintenance and loading and about the capabilities of the vessel and crew to operate safely in a variety of weather and sea conditions. This national standard does not replace the judgment or relieve the responsibility of the vessel master related to vessel safety. The Councils, the USCG, and NMFS, through the consultation process of paragraph (d) of this section, will review all FMPs, amendments, and regulations during their development to ensure they recognize any impact on the safety of human life at sea and minimize or mitigate that impact where practicable.

(c) *Safety considerations*. The following is a non-inclusive list of safety considerations that should be considered in evaluating management measures under national standard 10.

(1) *Operating environment*. Where and when a fishing vessel operates is partly a function of the general climate and weather patterns of an area. Typically, larger vessels can fish farther offshore and in more adverse weather conditions than smaller vessels. An FMP should try to avoid creating situations that result in vessels going out farther, fishing longer, or fishing in weather worse than they generally would have in the absence of management measures. Where these conditions are unavoidable, management measures should mitigate these effects, consistent with the overall management goals of the fishery.

(2) *Gear and vessel loading requirements*. A fishing vessel operates in a very dynamic environment that can be an extremely dangerous place to work. Moving heavy gear in a seaway creates a dangerous situation on a vessel. Carrying extra gear can also significantly reduce the stability of a fishing vessel, making it prone to capsizing. An FMP should consider the safety and stability of fishing vessels when requiring specific gear or requiring the removal of gear from the water. Management measures should reflect a sensitivity to these issues and provide methods of mitigation of these situations wherever possible.

(3) *Limited season and area fisheries*. Fisheries where time constraints for harvesting are a significant factor and with no flexibility for weather, often called ''derby'' fisheries, can create serious safety problems. To participate fully in such a fishery, fishermen may fish in bad weather and overload their vessel with catch and/or gear. Where these conditions exist, FMPs should attempt to mitigate these effects and avoid them in new management regimes, as discussed in paragraph (e) of this section.

(d) *Consultation*. During preparation of any FMP, FMP amendment, or regulation that might affect safety of human life at sea, the Council should consult with the USCG and the fishing industry as to the nature and extent of any adverse impacts. This consultation may be done through a Council advisory panel, committee, or other review of the

FMP, FMP amendment, or regulations. Mitigation, to the extent practicable, and other safety considerations identified in paragraph (c) of this section should be included in the FMP.

(e) *Mitigation measures*. There are many ways in which an FMP may avoid or provide alternative measures to reduce potential impacts on safety of human life at sea. The following is a list of some factors that could be considered when management measures are developed:

(1) Setting seasons to avoid hazardous weather.

(2) Providing for seasonal or trip flexibility to account for bad weather (weather days).

(3) Allowing for pre- and post-season ''soak time'' to deploy and pick up fixed gear, so as to avoid overloading vessels with fixed gear.

(4) Tailoring gear requirements to provide for smaller or lighter gear for smaller vessels.

(5) Avoiding management measures that require hazardous at-sea inspections or enforcement if other comparable enforcement could be accomplished as effectively.

(6) Limiting the number of participants in the fishery.

(7) Spreading effort over time and area to avoid potential gear and/or vessel conflicts.

(8) Implementing management measures that reduce the race for fish and the resulting incentives for fishermen to take additional risks with respect to vessel safety.

[FR Doc. 98–11471 Filed 4–30–98; 8:45 am]

BILLING CODE 3510–22–F